GZL + EDW/EDS

VELUX®

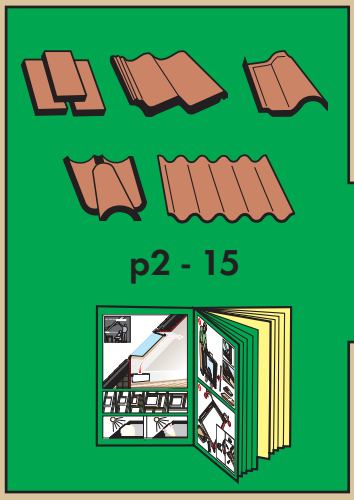

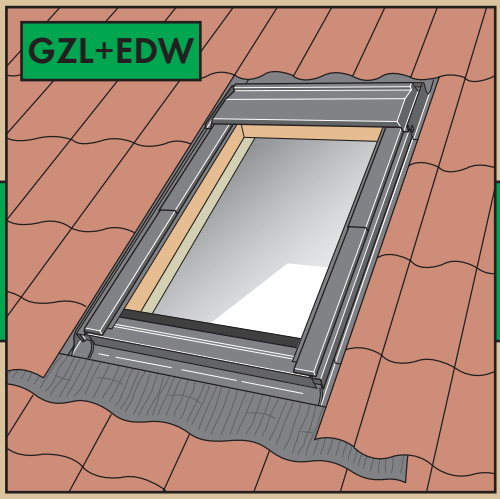

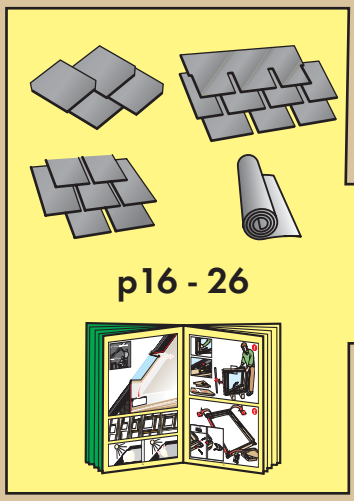

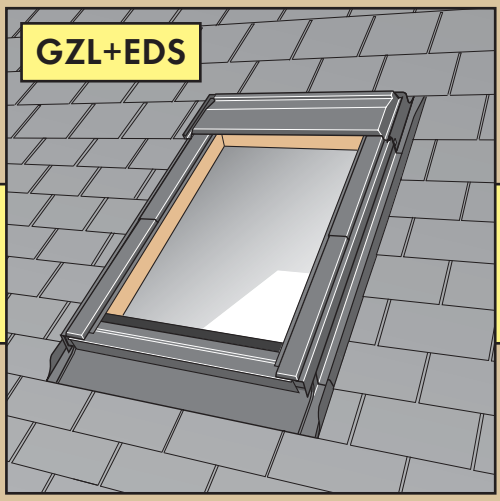

451244

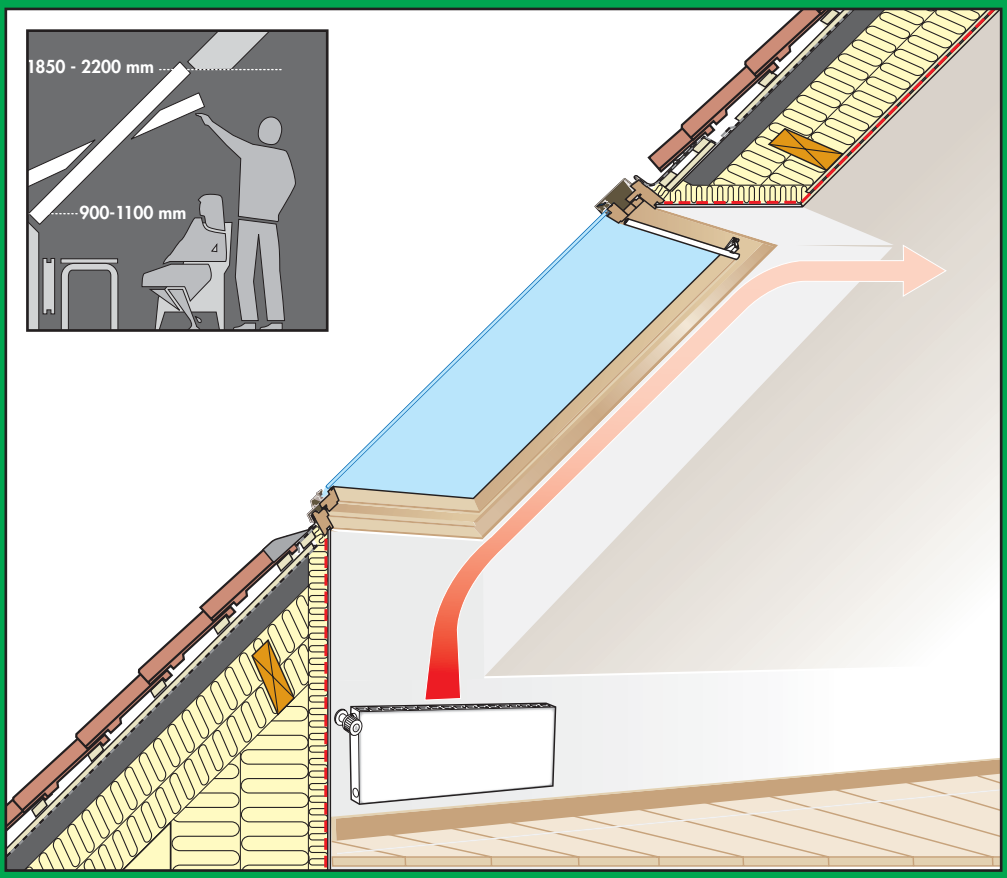
1850 - 2200 mm
900-1100 mm

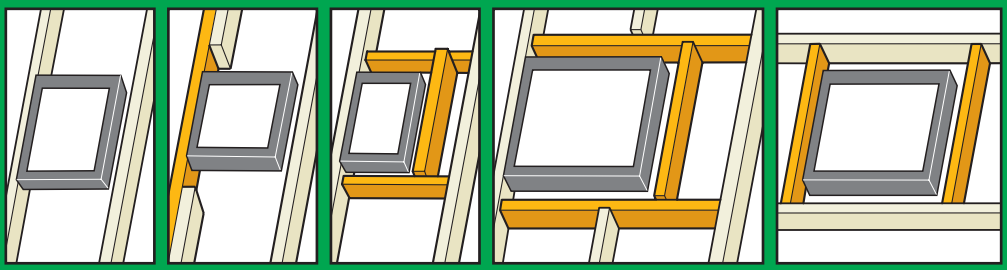

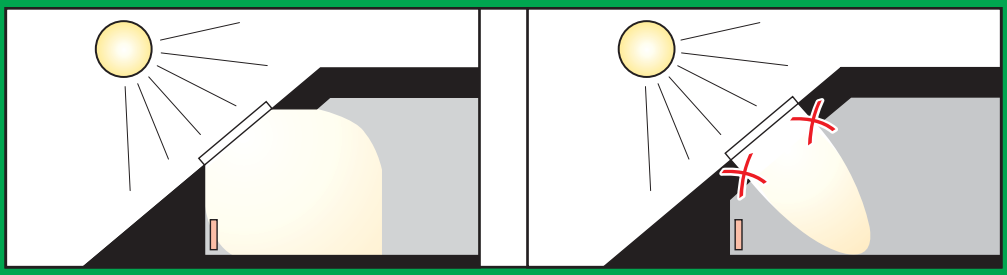

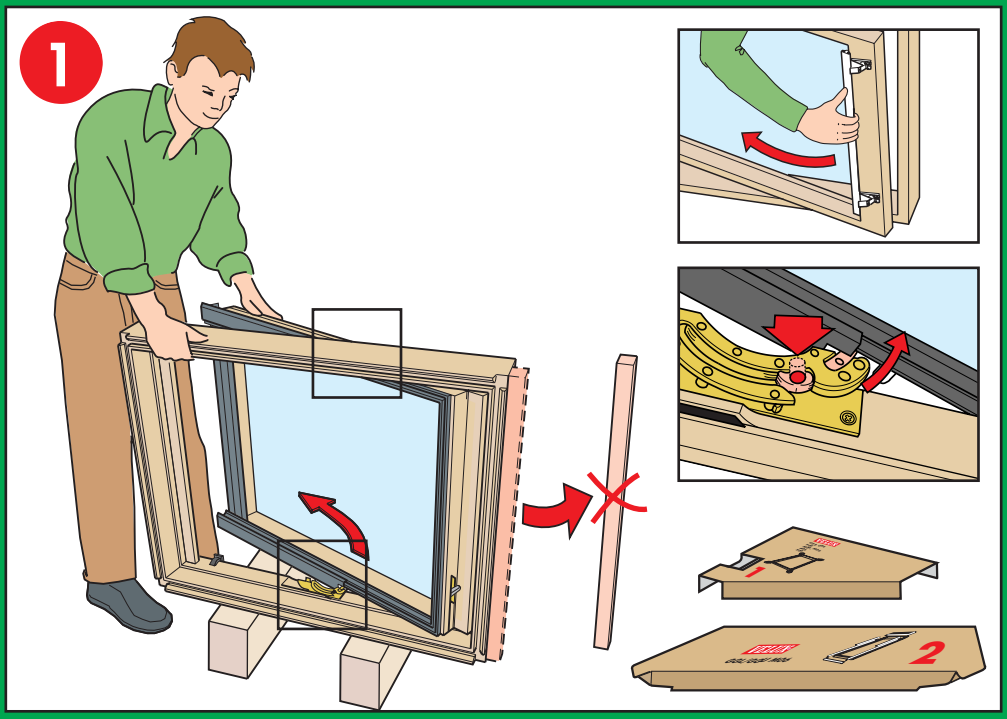
1
1
2

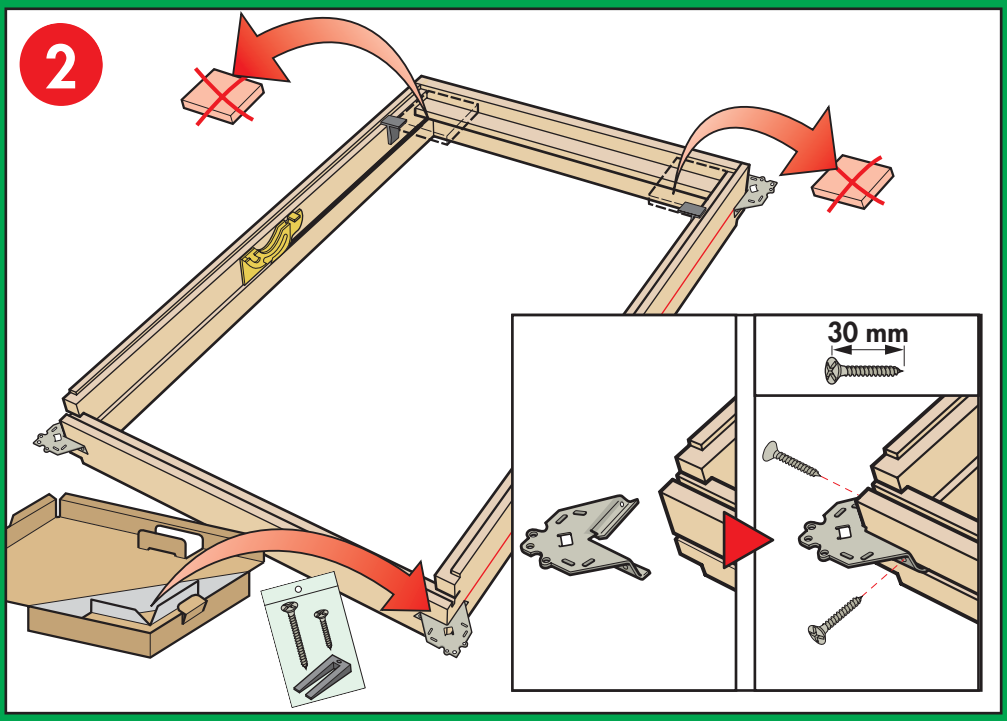
2
30 mm

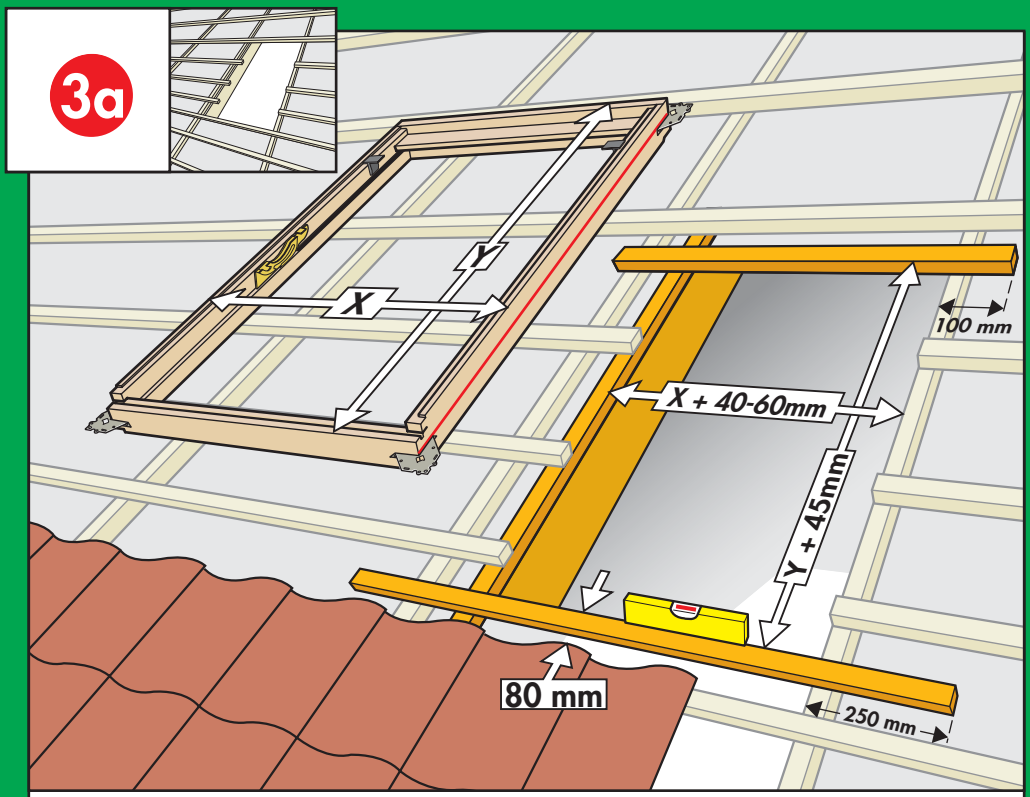
3a
Y
X
100 mm
X + 40-60mm
Y + 45mm
80 mm
250 mm

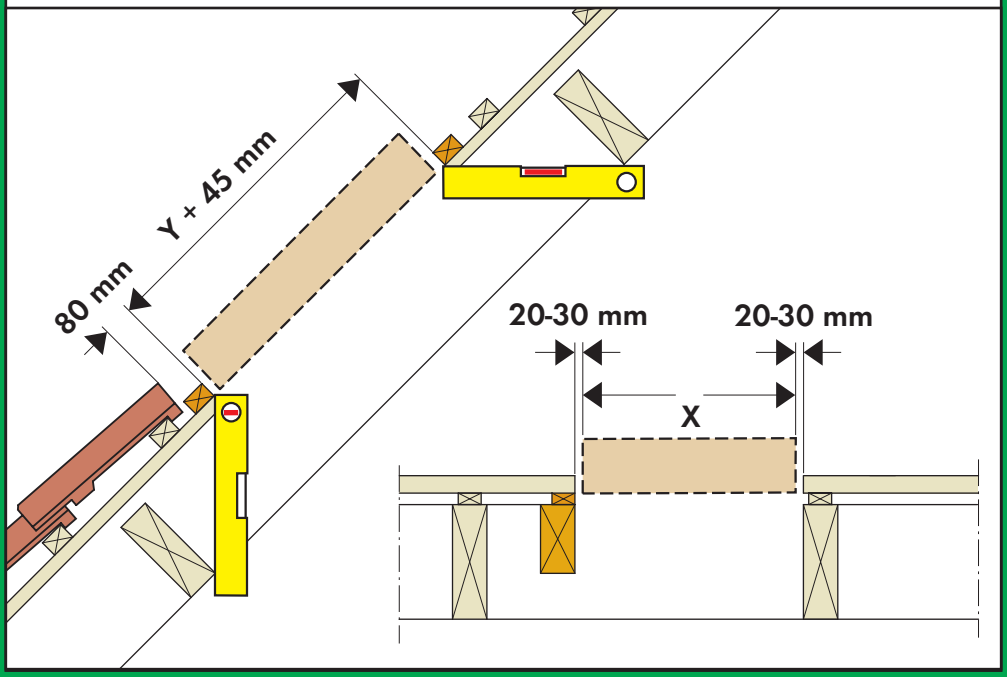
Y + 45 mm
80 mm
20-30 mm
20-30 mm
X

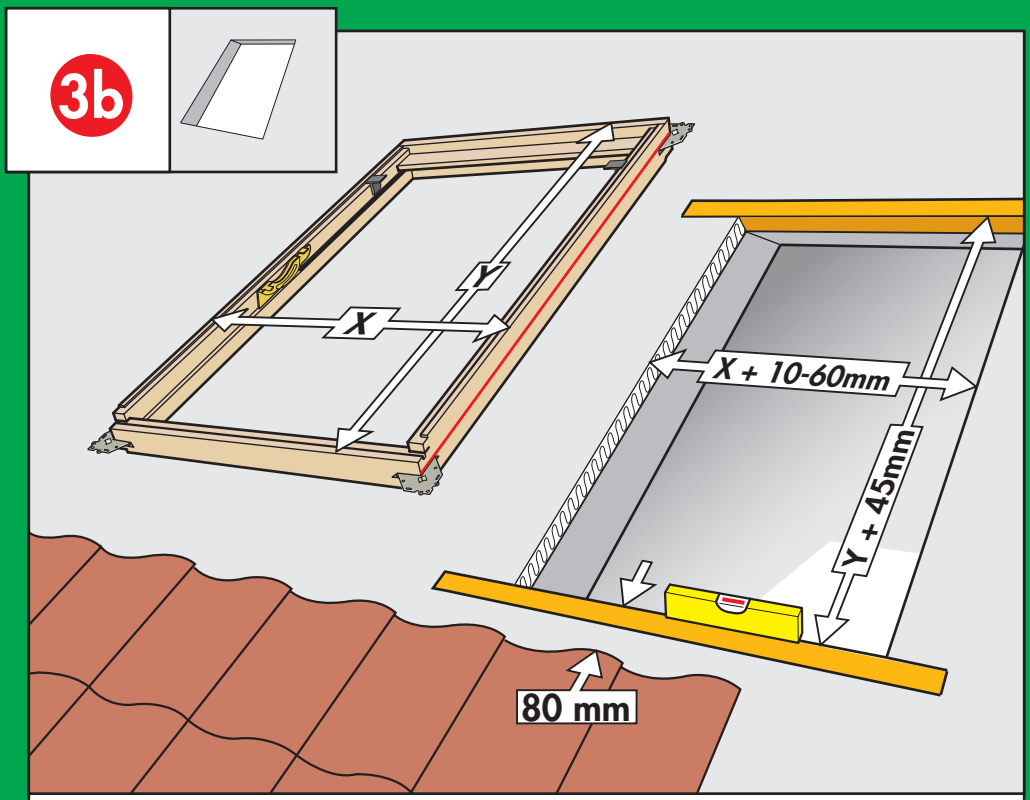
3b
Y
X
X + 10-60mm
Y + 45mm
80 mm

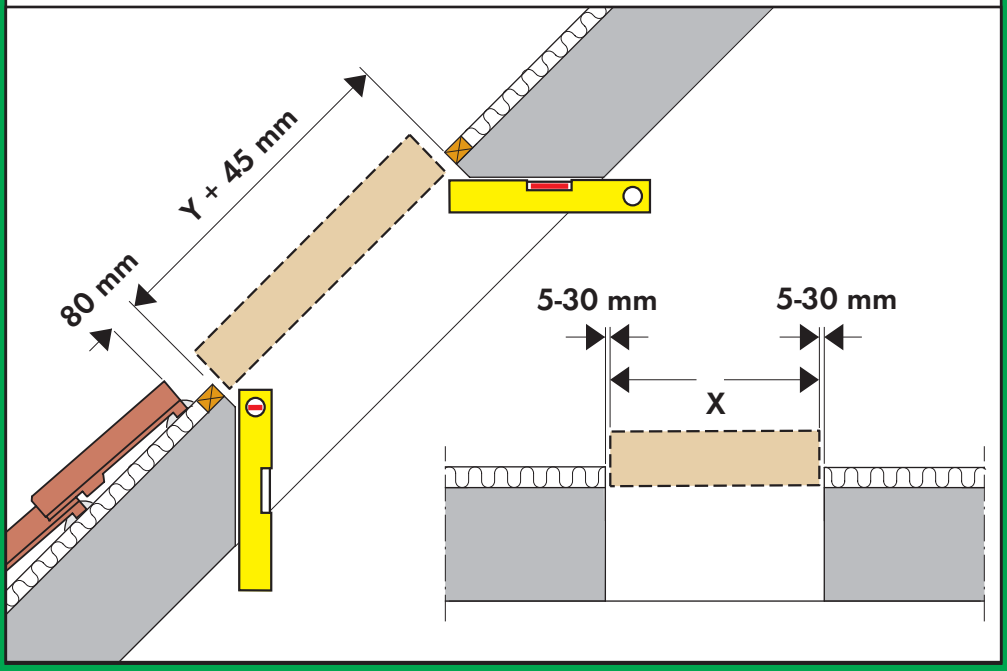
Y + 45 mm
80 mm
5-30 mm
5-30 mm
X

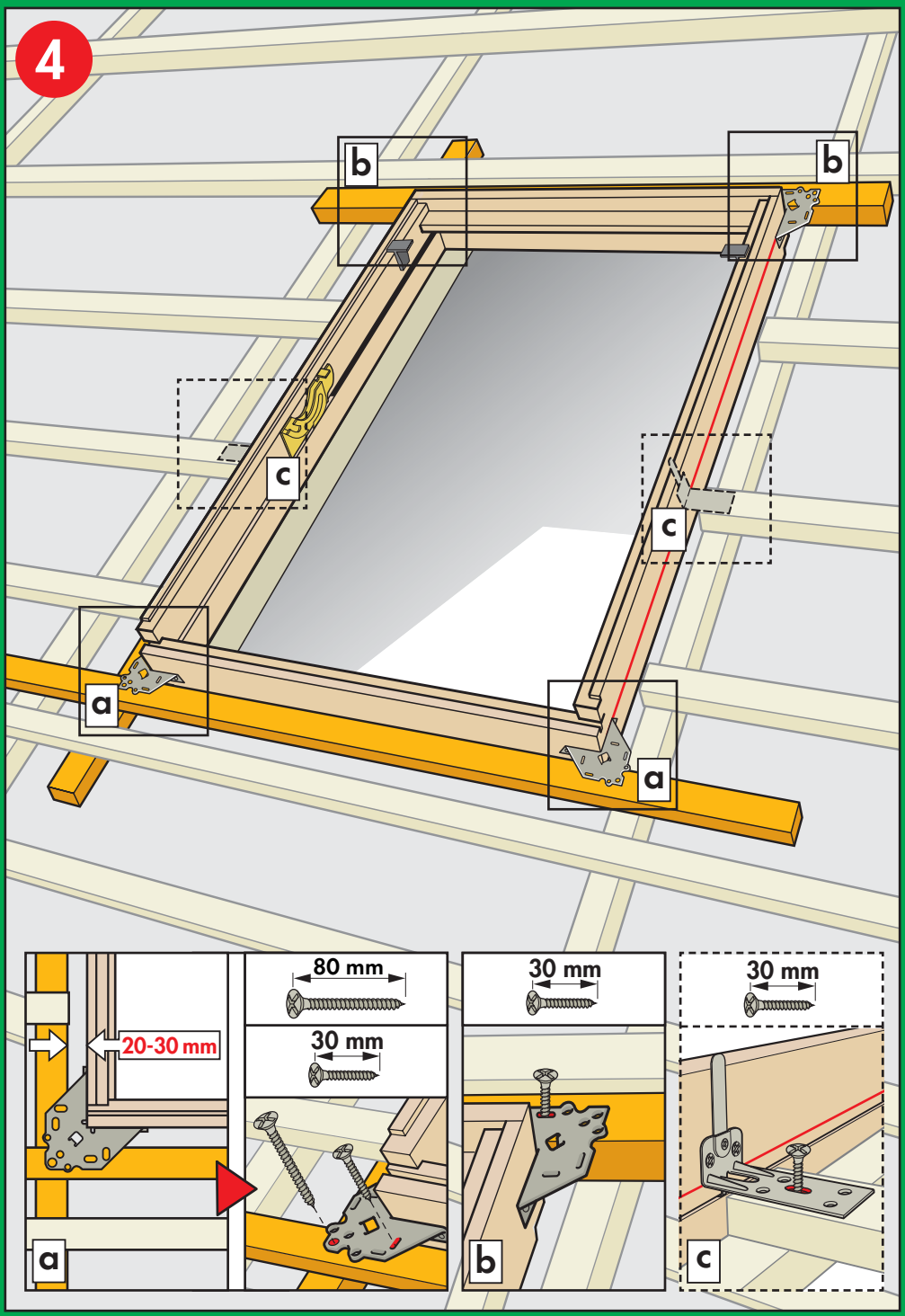
4
b
b
c
c
a
a
20-30 mm
80 mm
30 mm
a
30 mm
b
30 mm
c

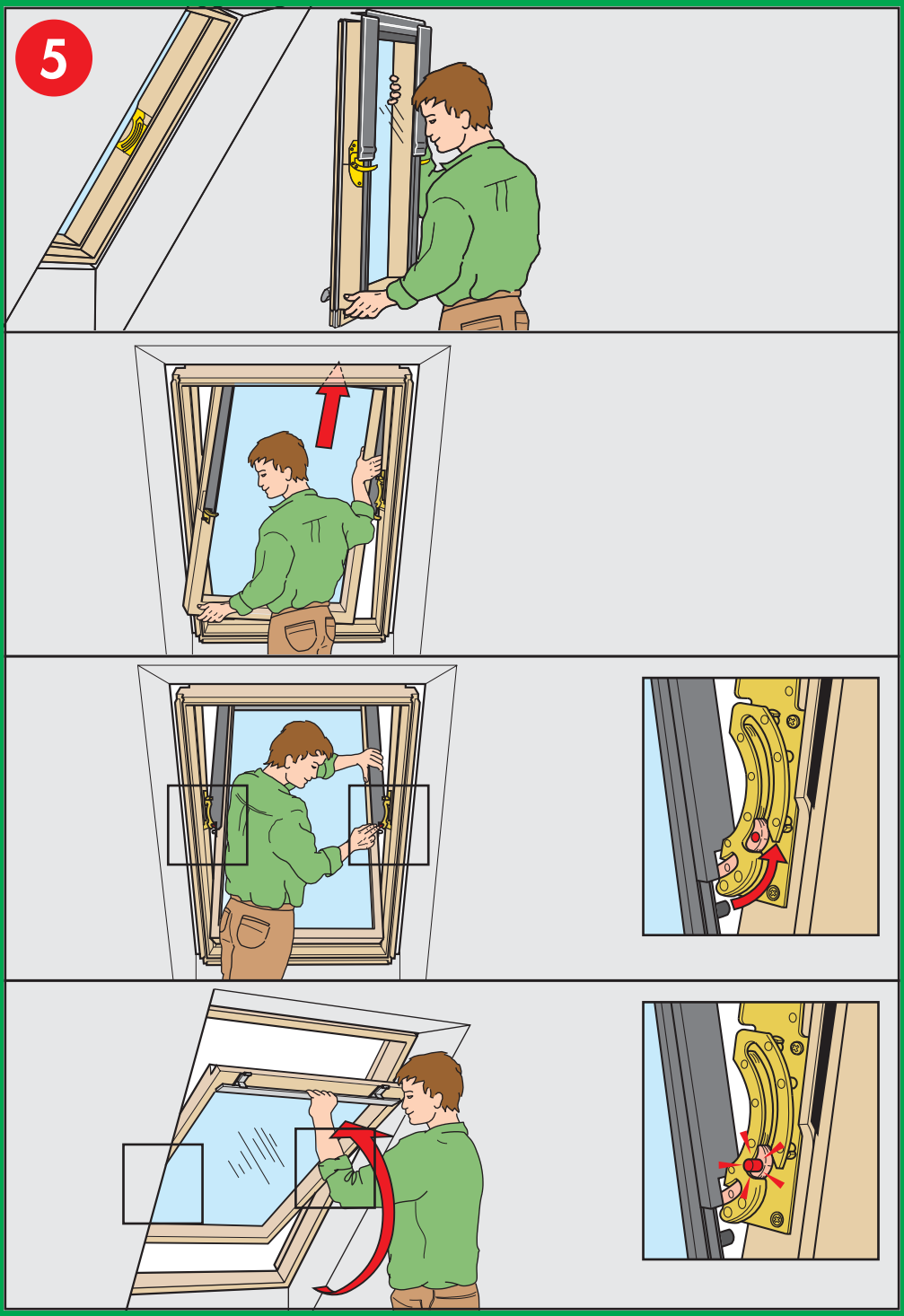
5

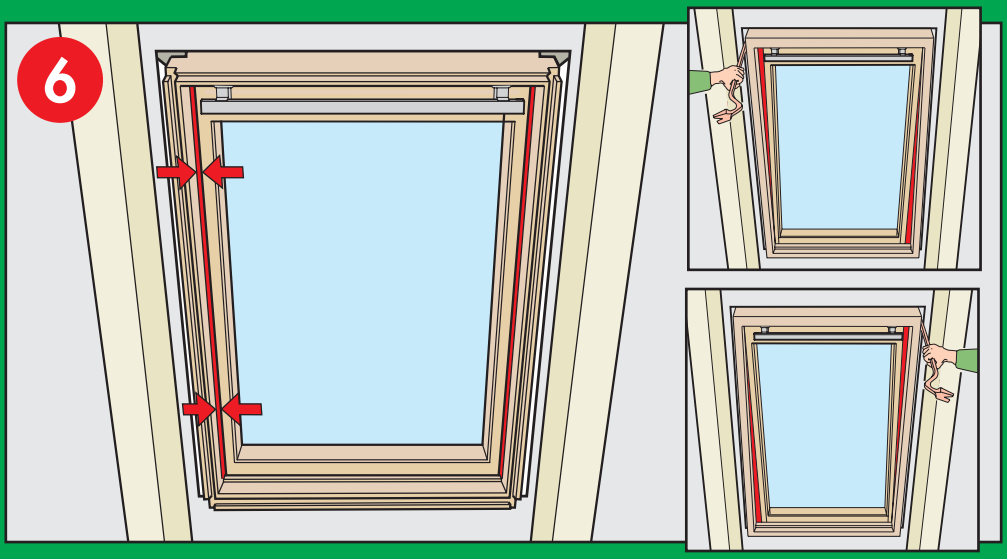
6

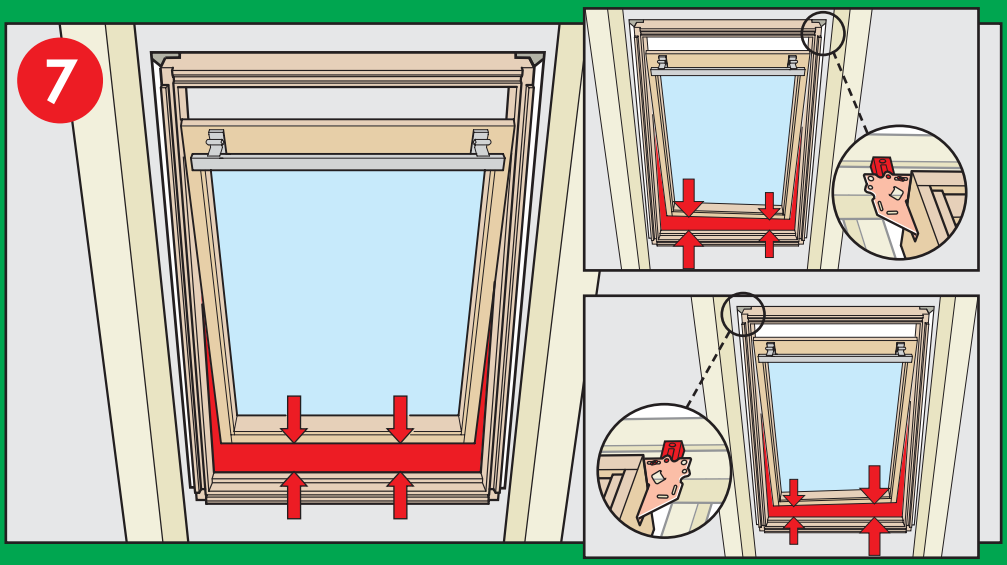
7

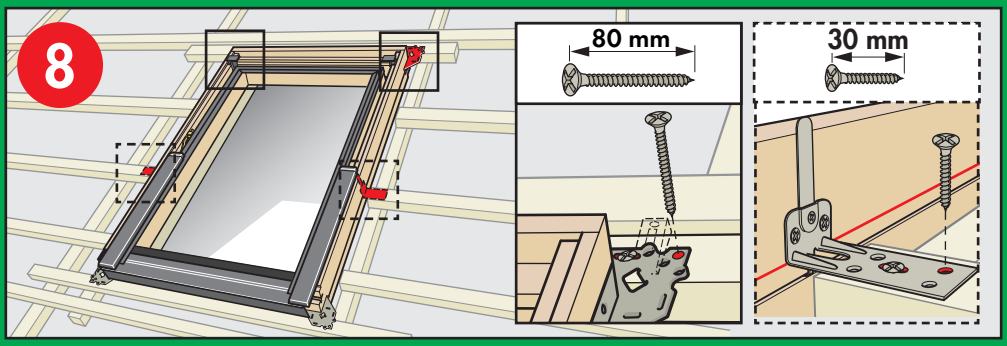
8
80 mm
30 mm

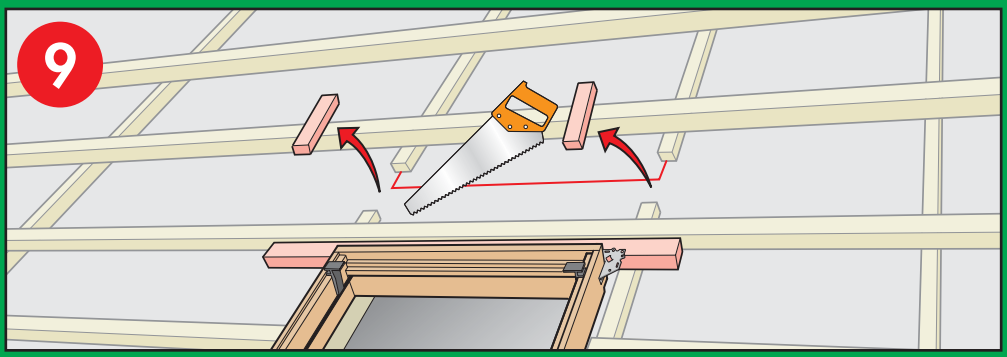
9

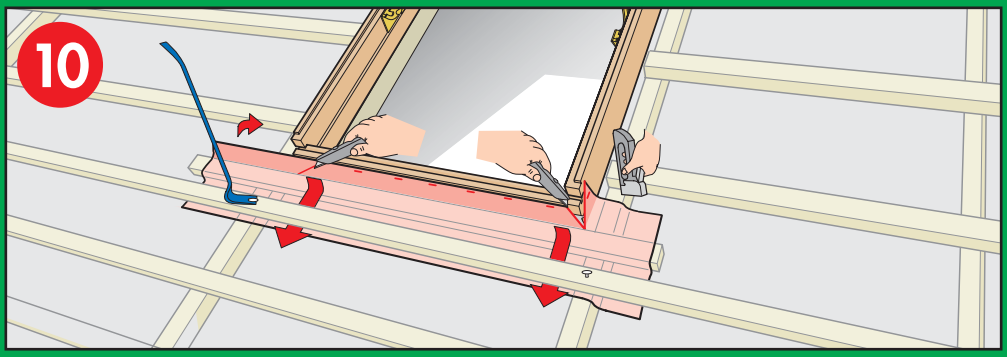
10

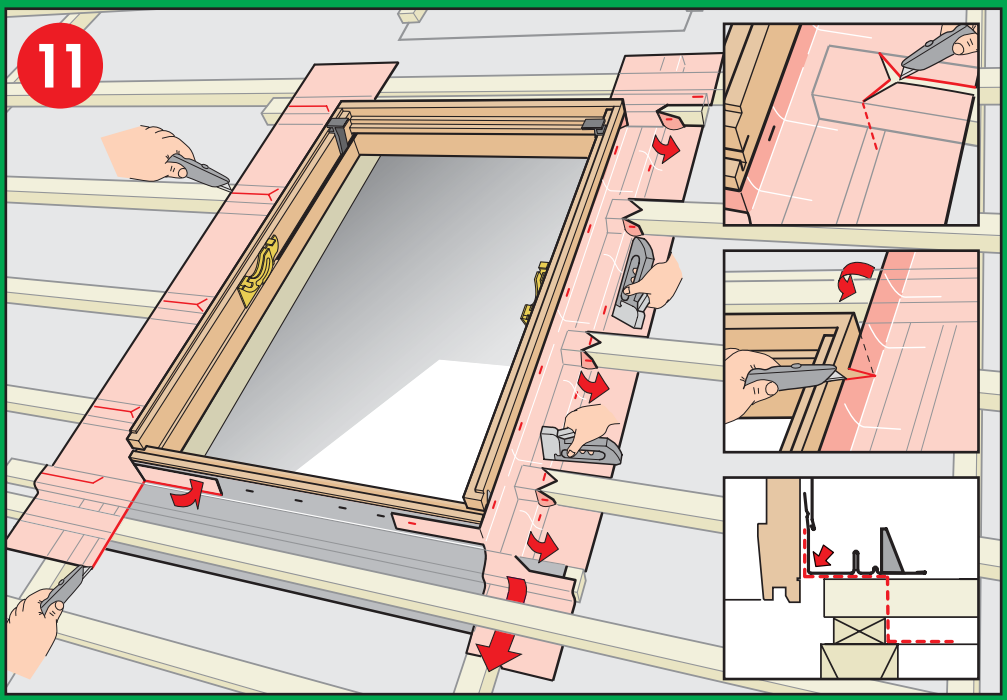
11

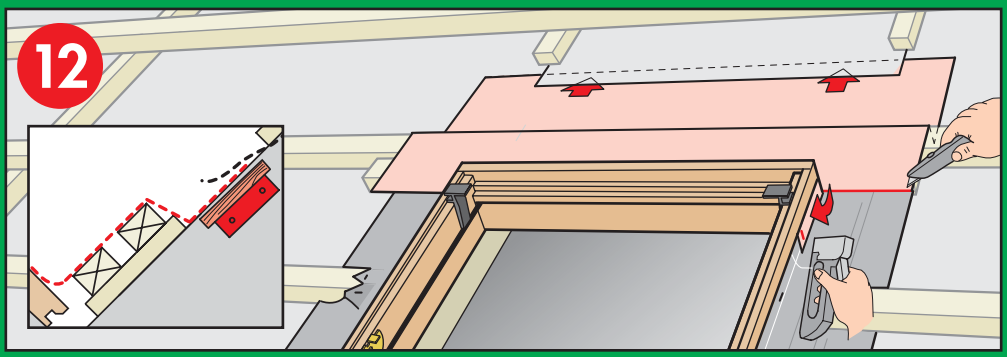
12

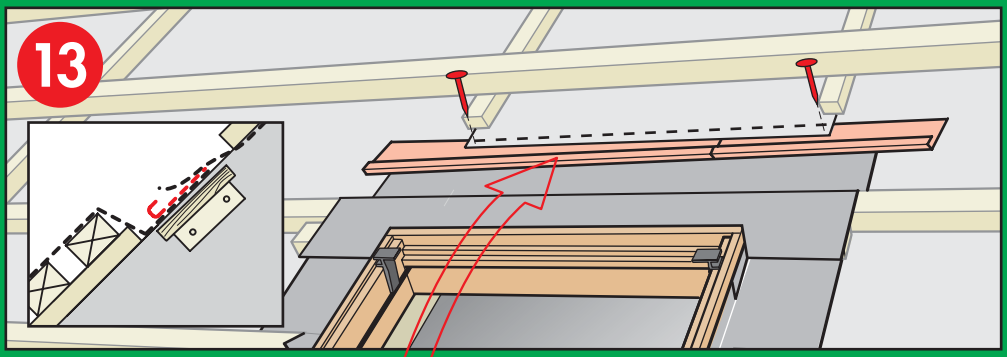
13

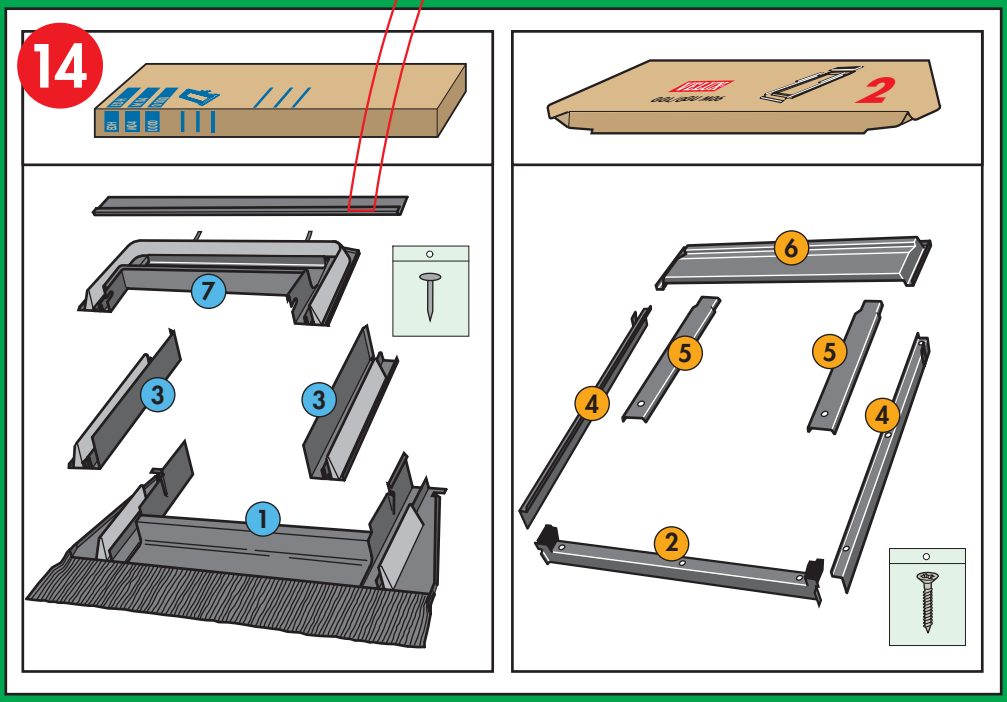
14
7
3
3
1
2
6
5
5
4
4
2

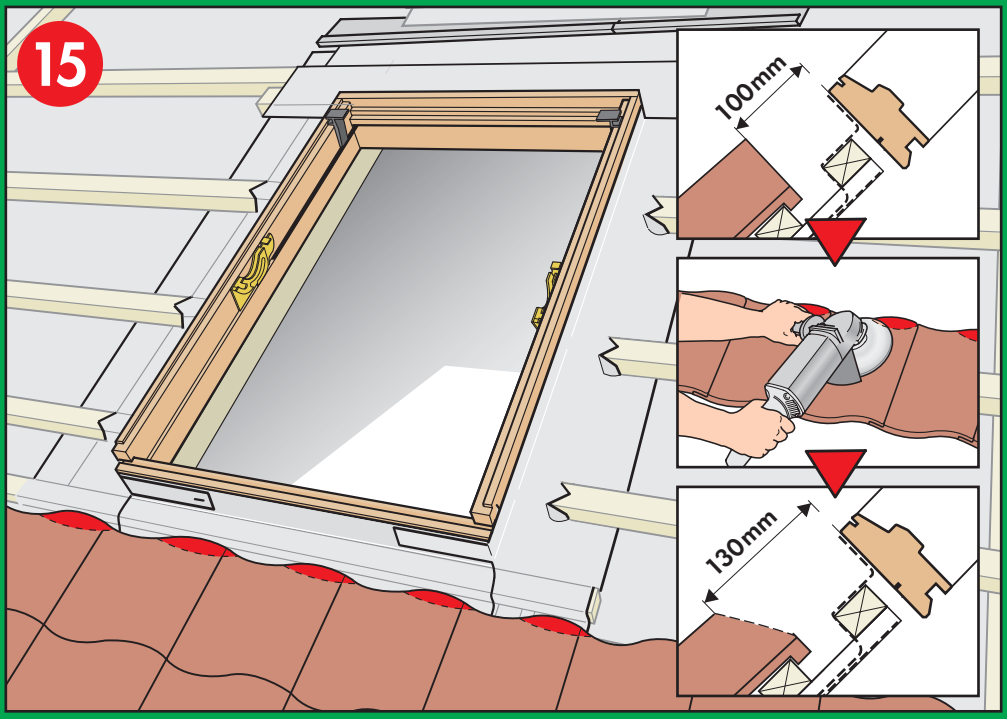
15
100mm
130mm

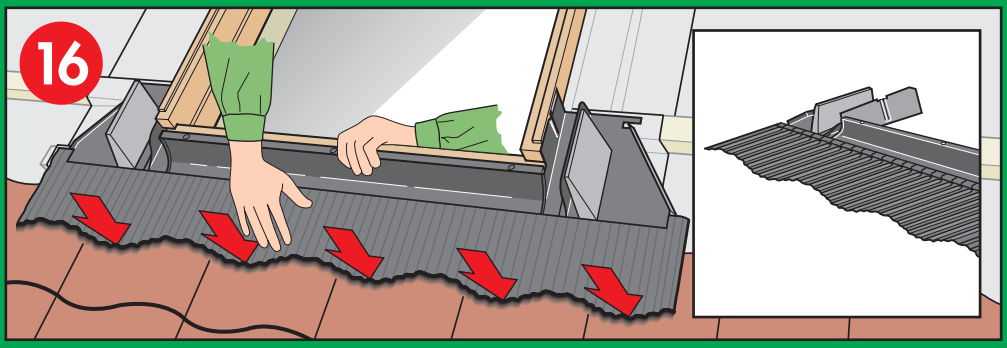
16

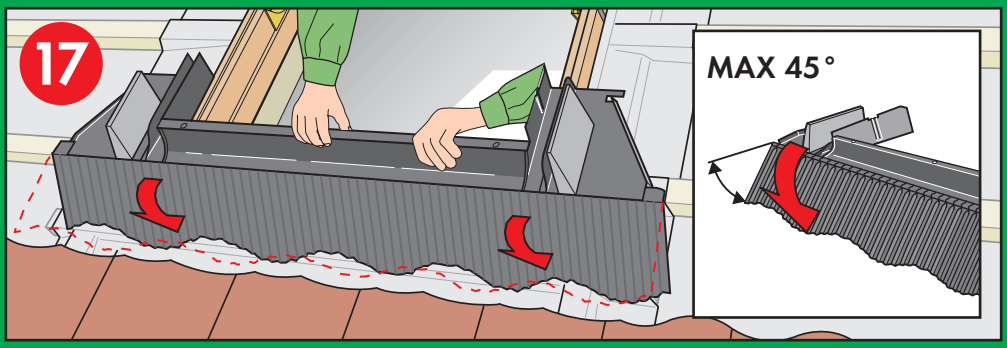
17
MAX 45°

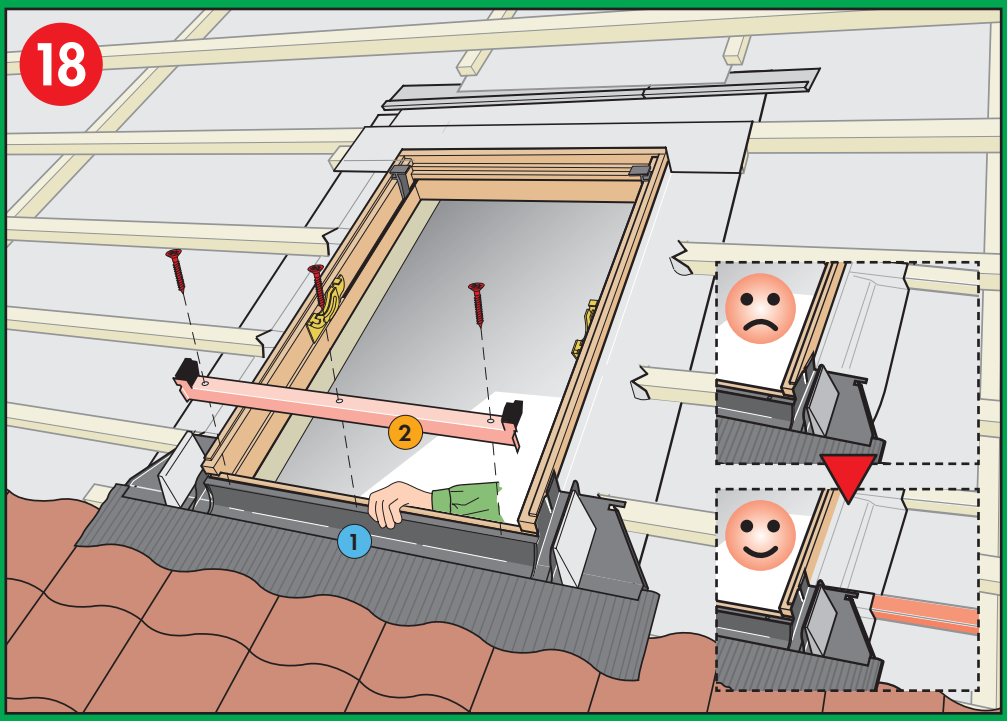
18
2
1

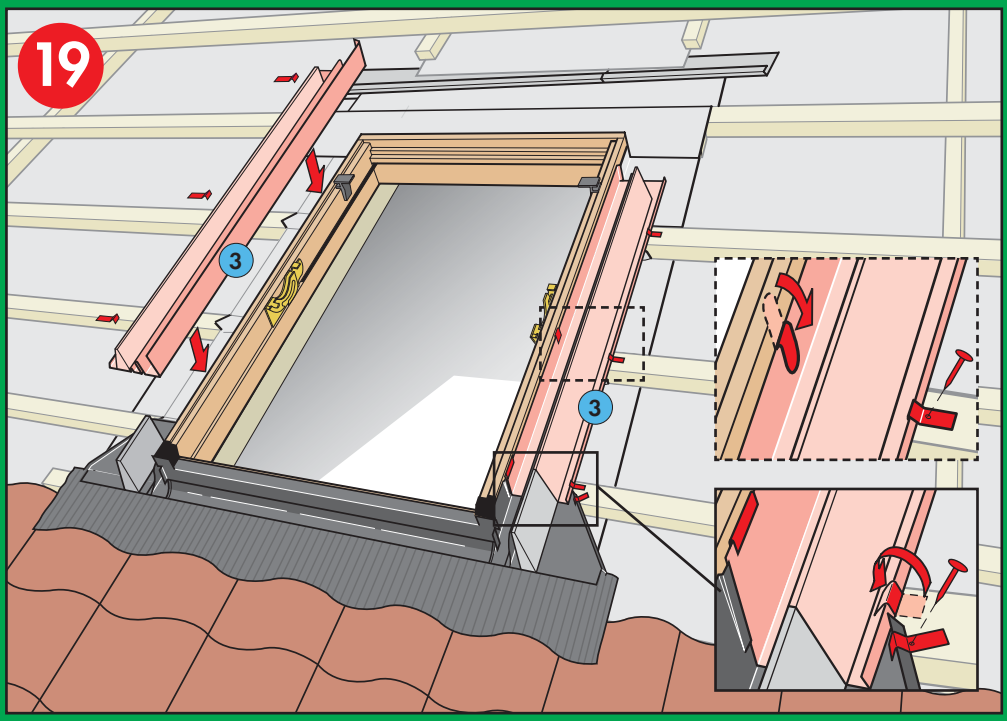
19
3
3

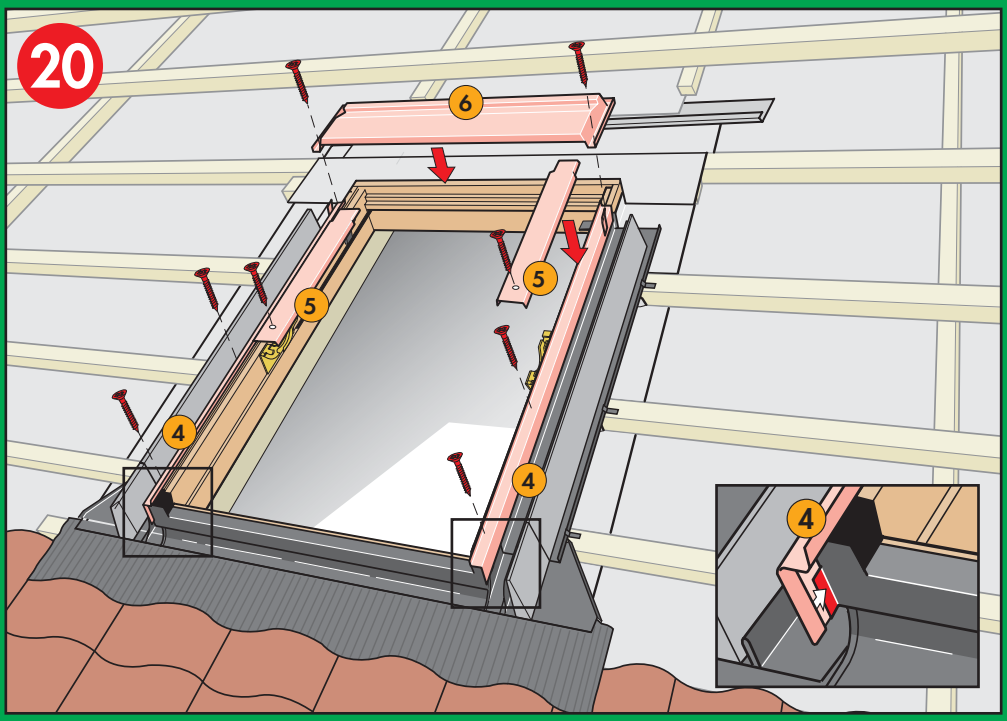
20
6
5
5
4
4
4

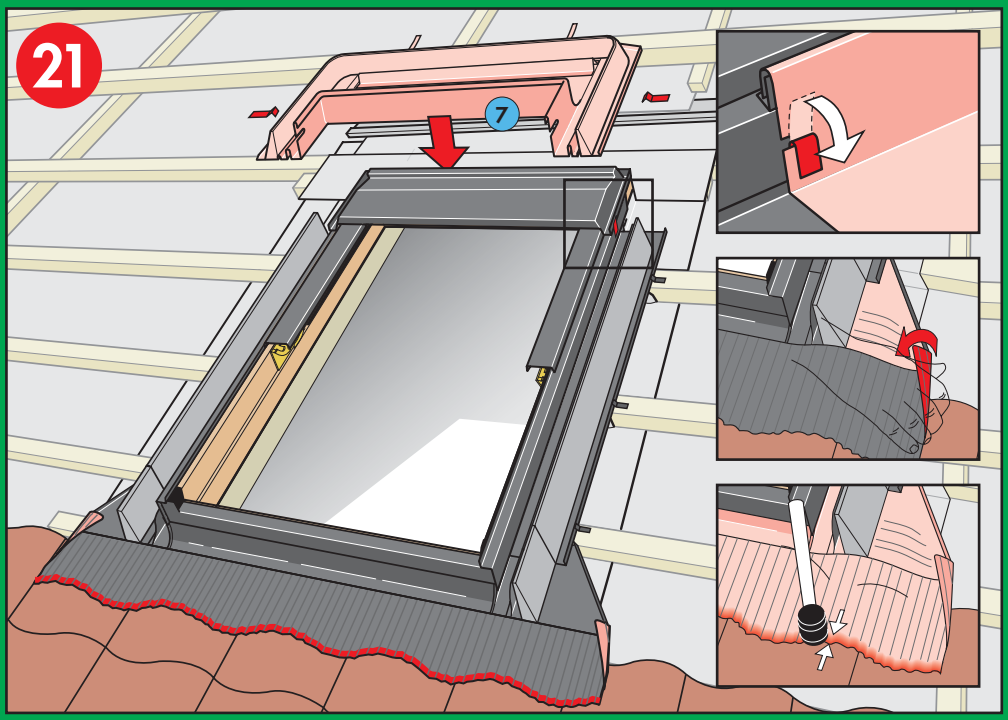
21
7

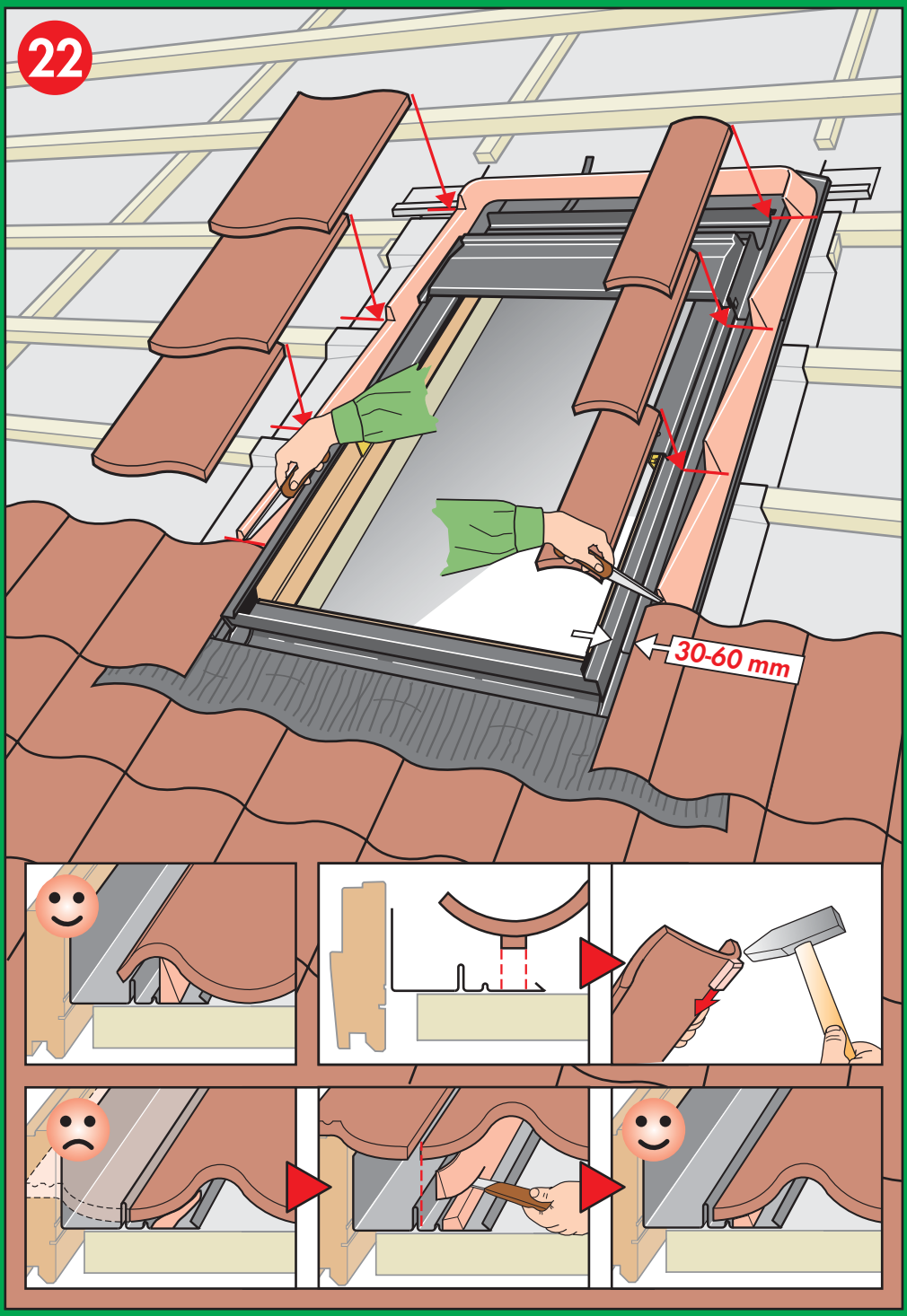
22
30-60 mm

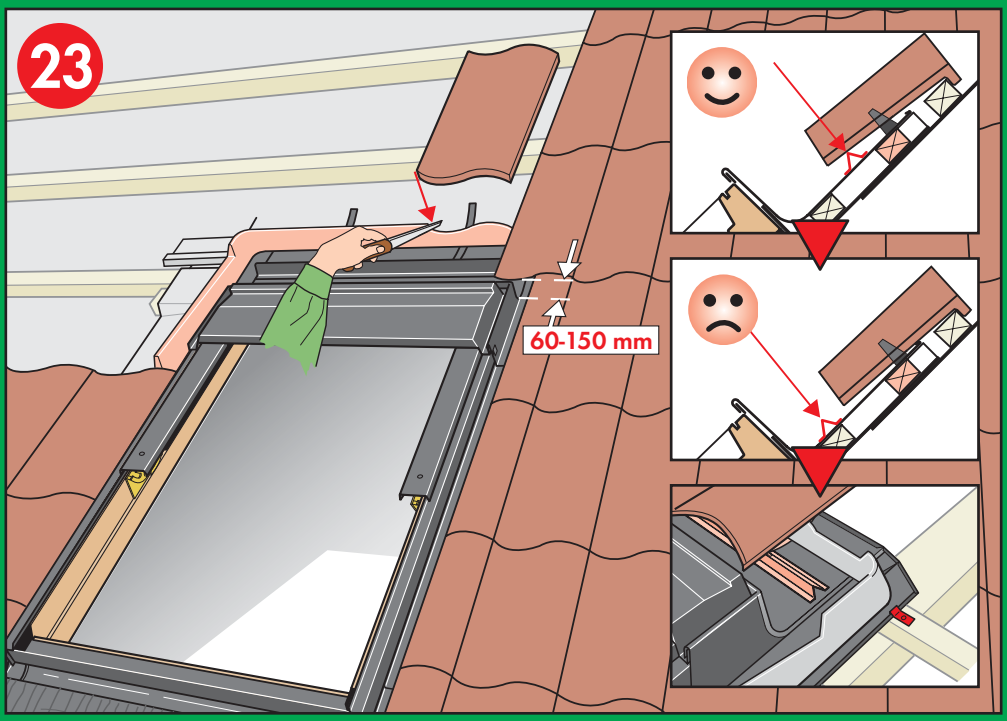
23
60-150 mm

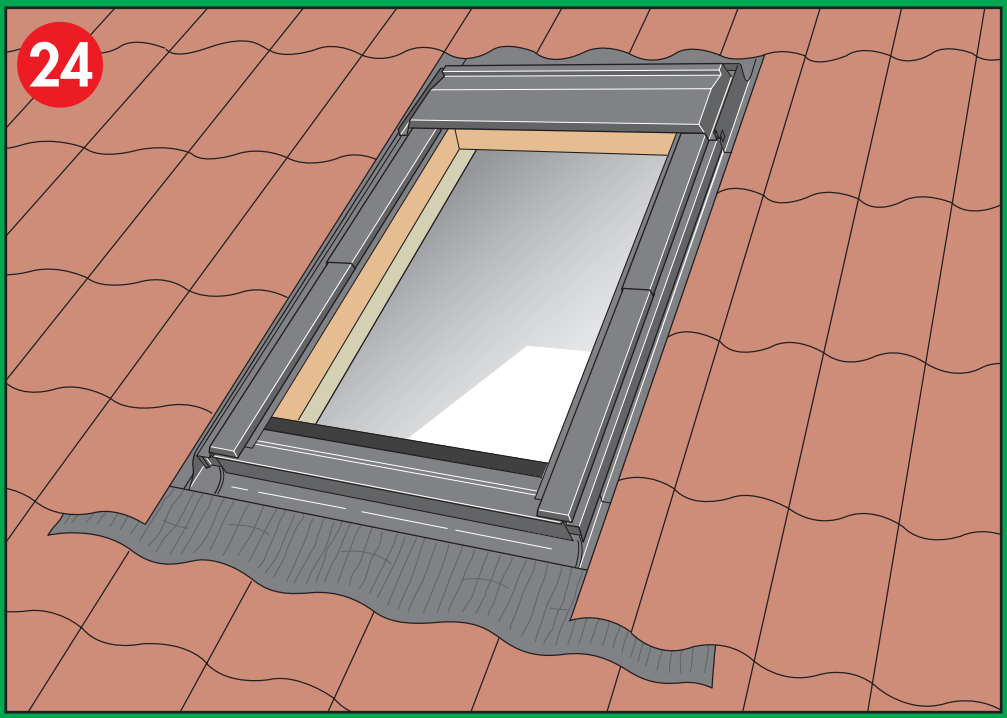
24

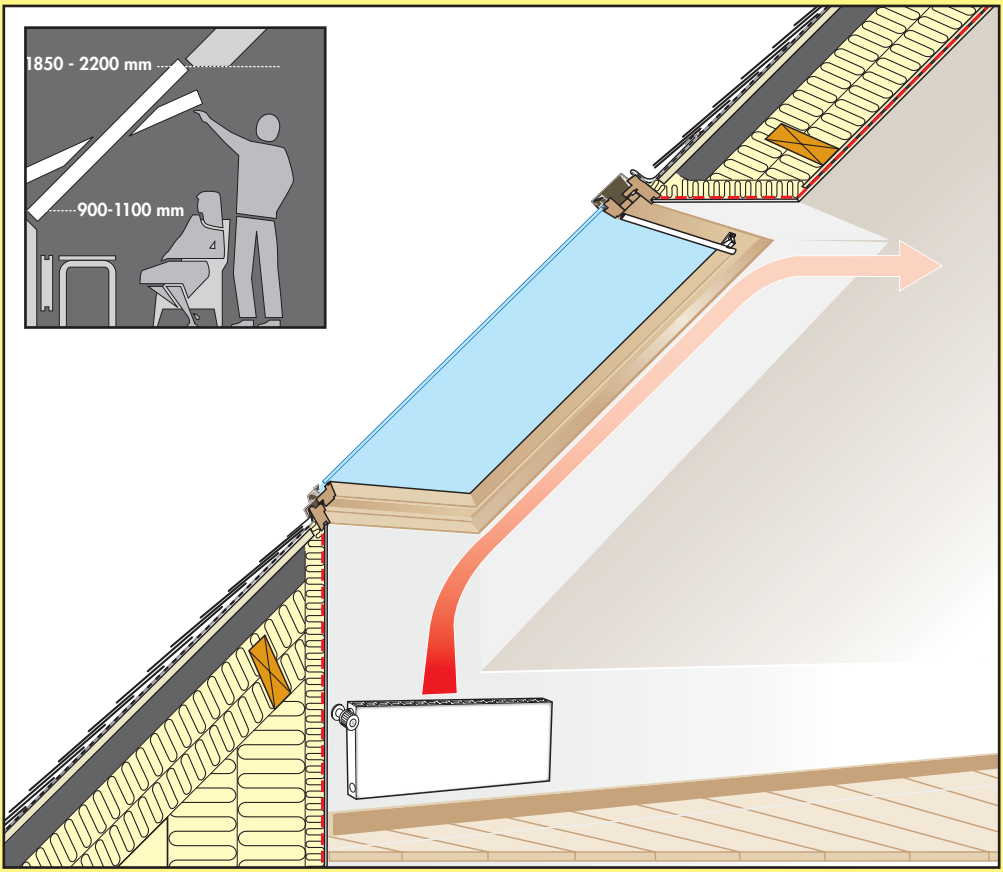
1850 - 2200 mm
900-1100 mm

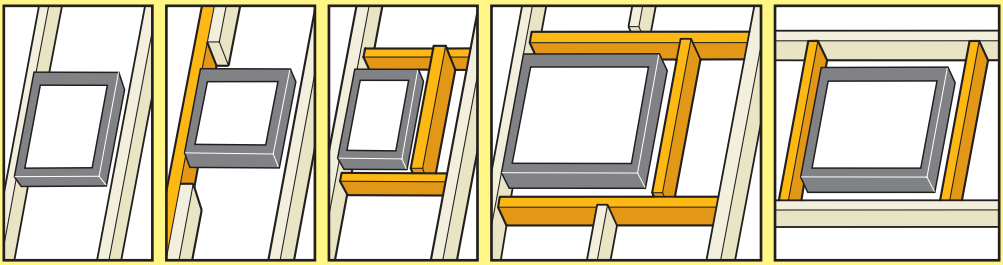

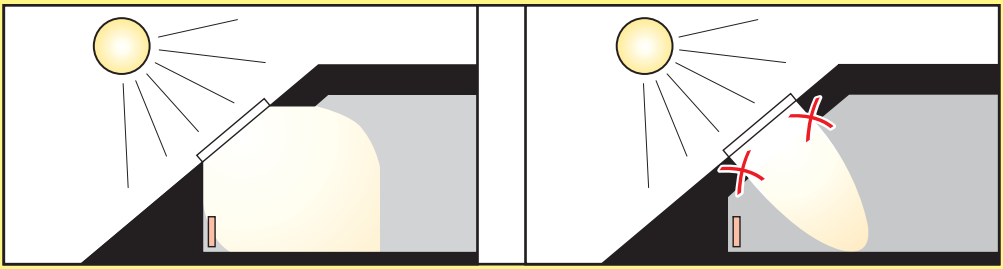

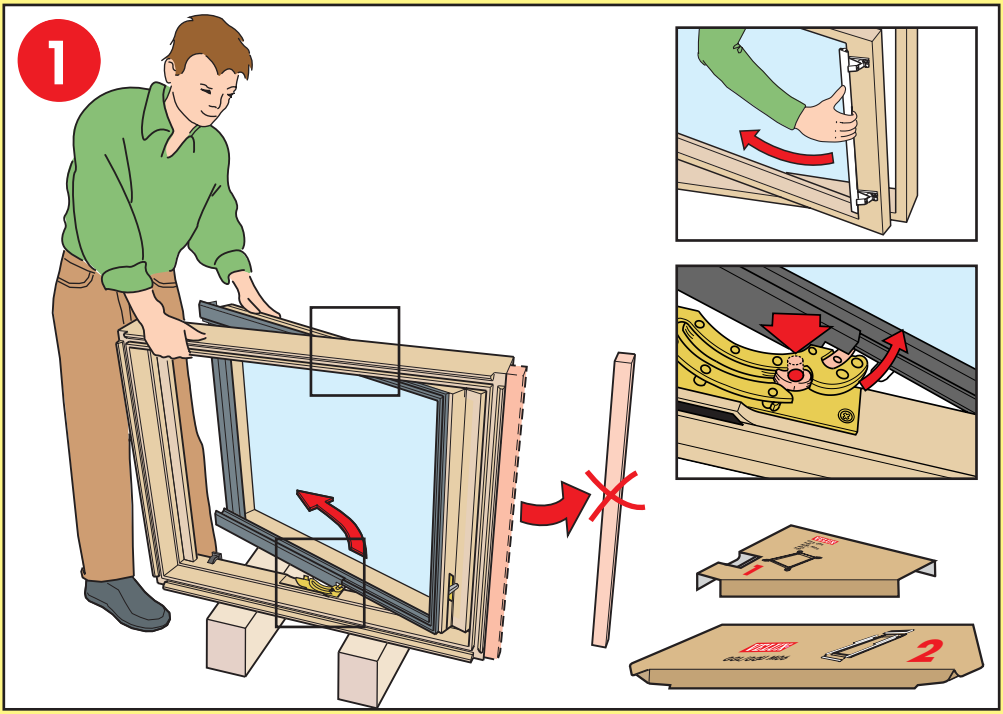
1
1
2

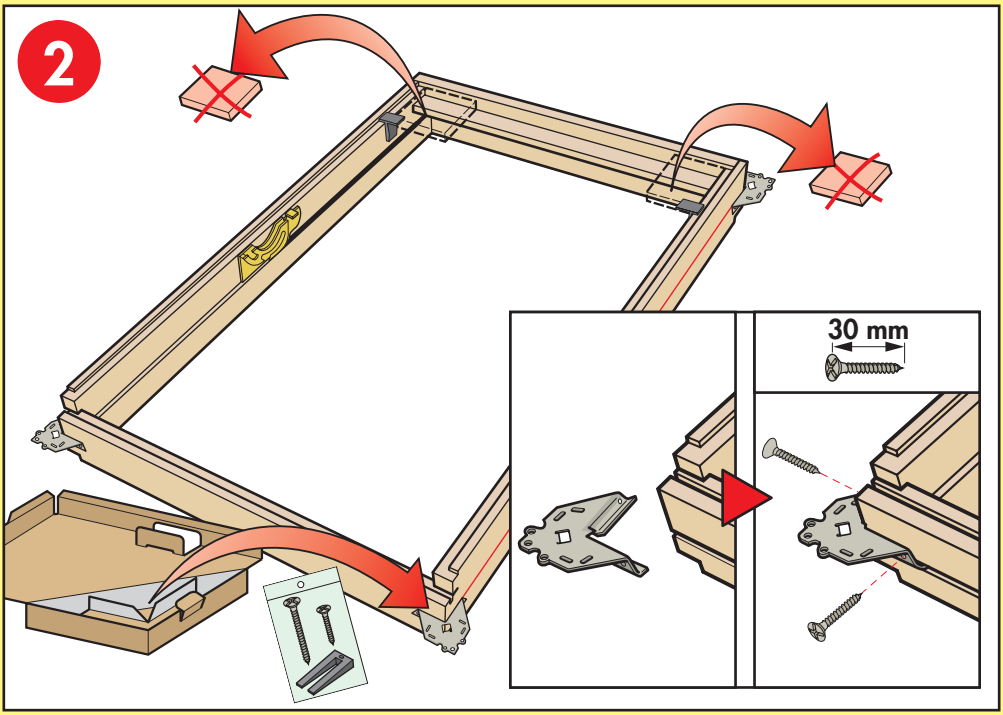
2
30 mm

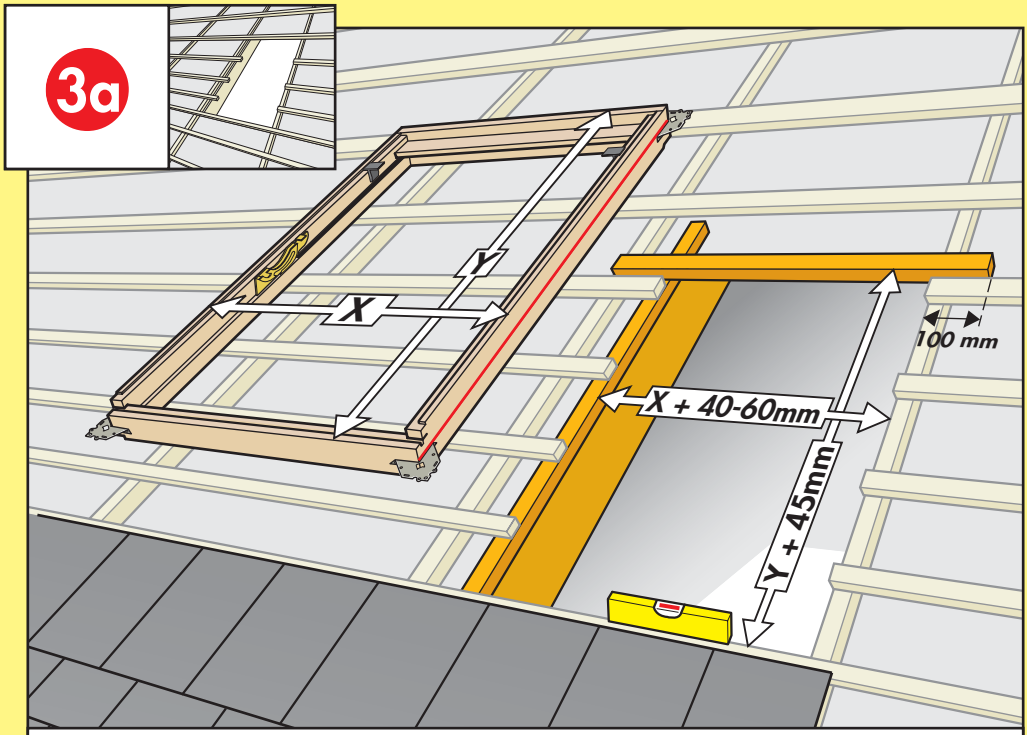
3a
Y
X
X + 40-60mm
100 mm
Y + 45mm

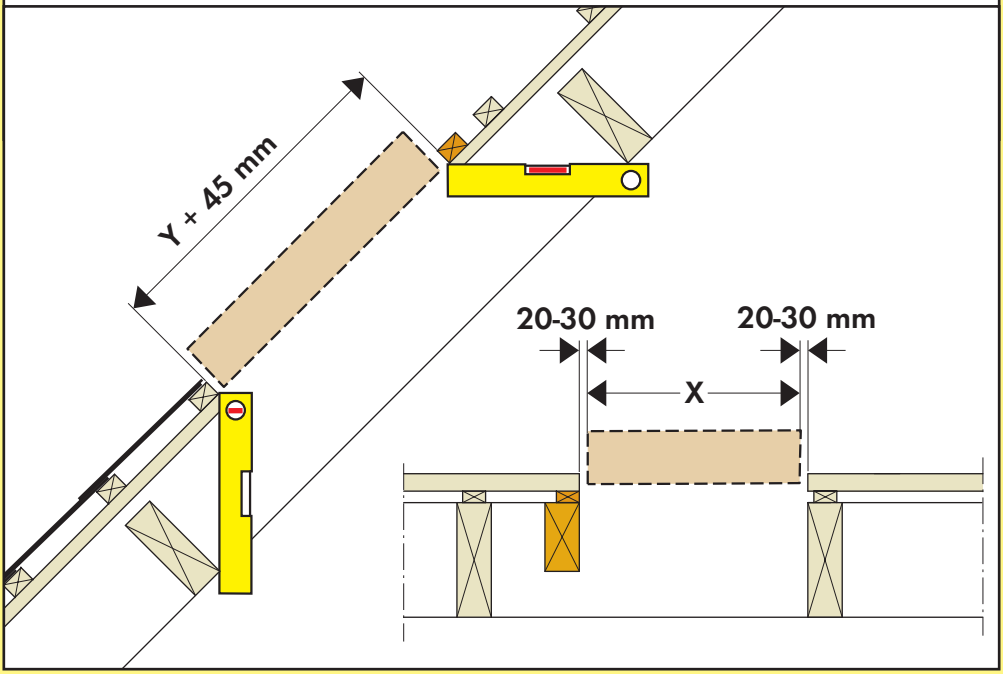
Y + 45 mm
20-30 mm
20-30 mm
X

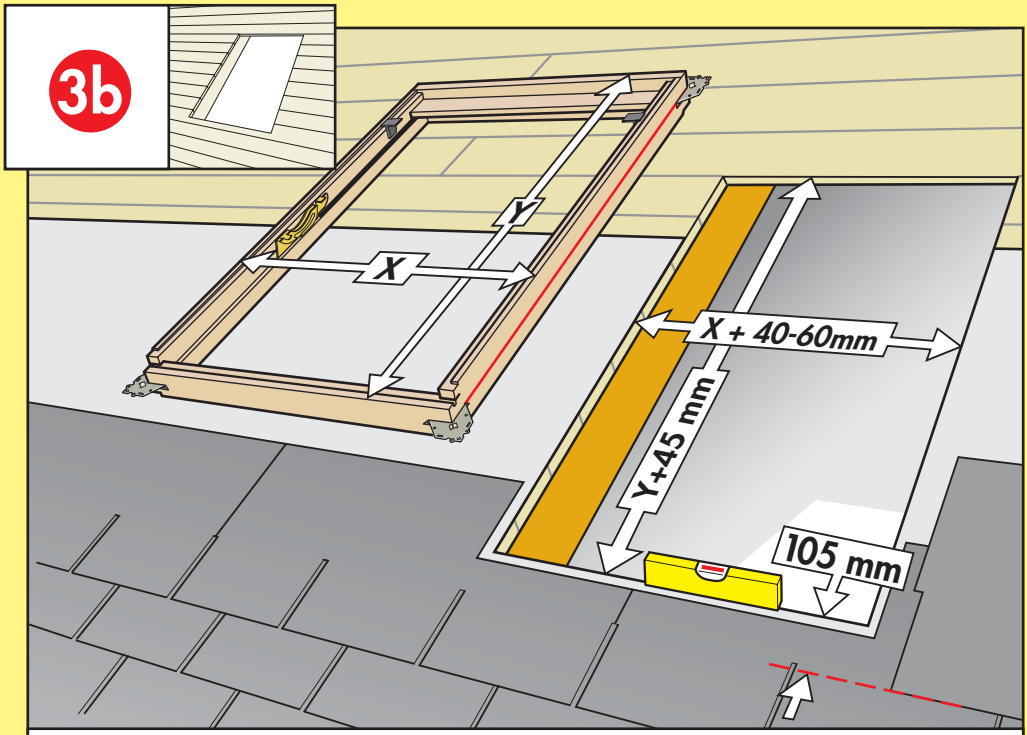
3b
Y
X
X + 40-60mm
Y+45 mm
105 mm

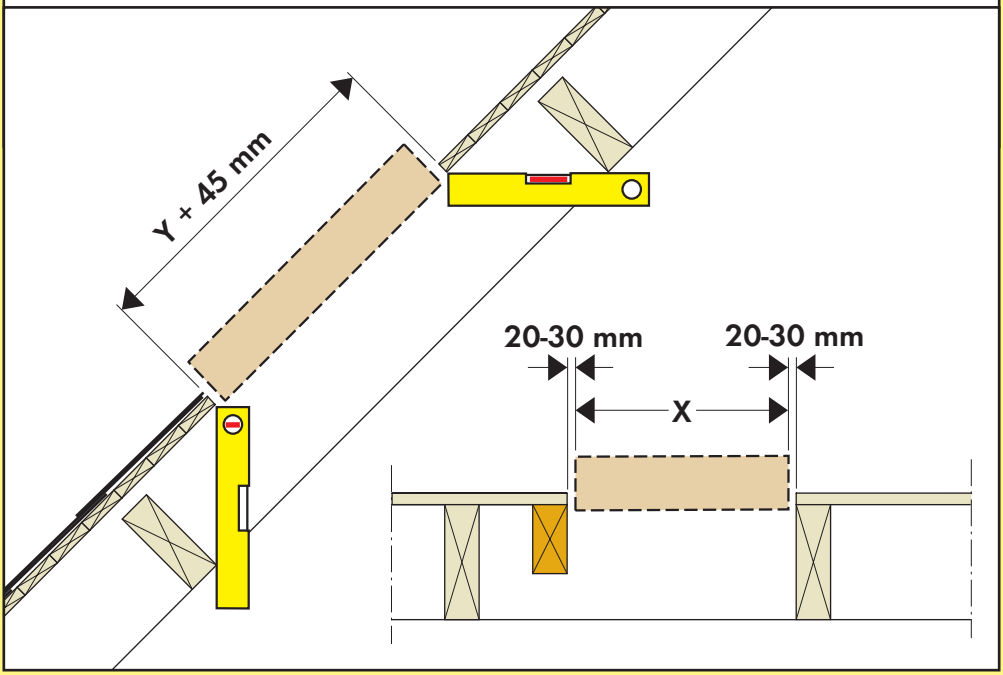
Y + 45 mm
20-30 mm
20-30 mm
X

4

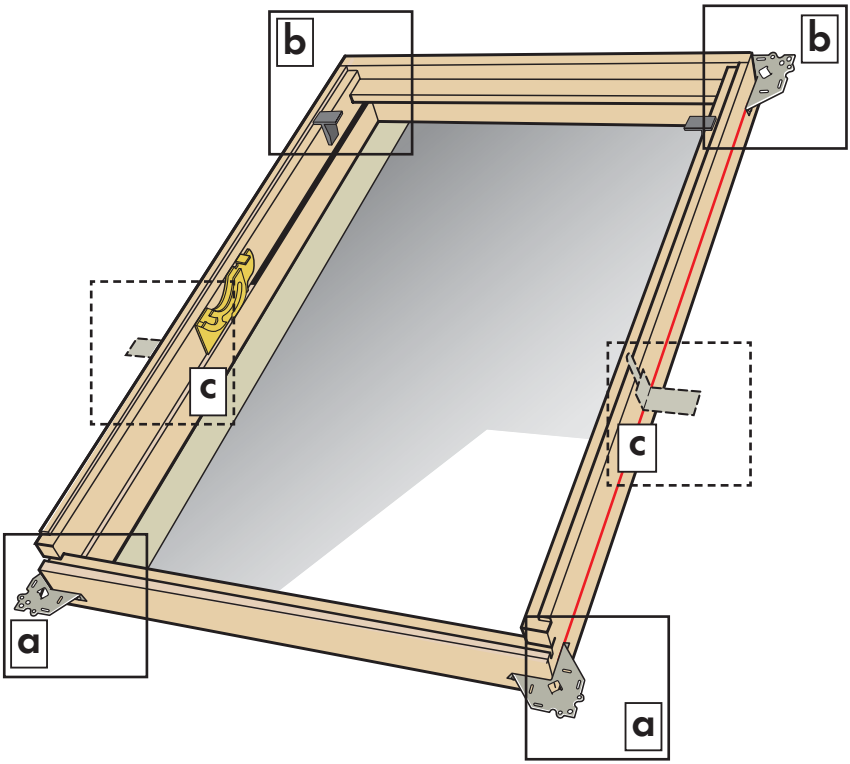

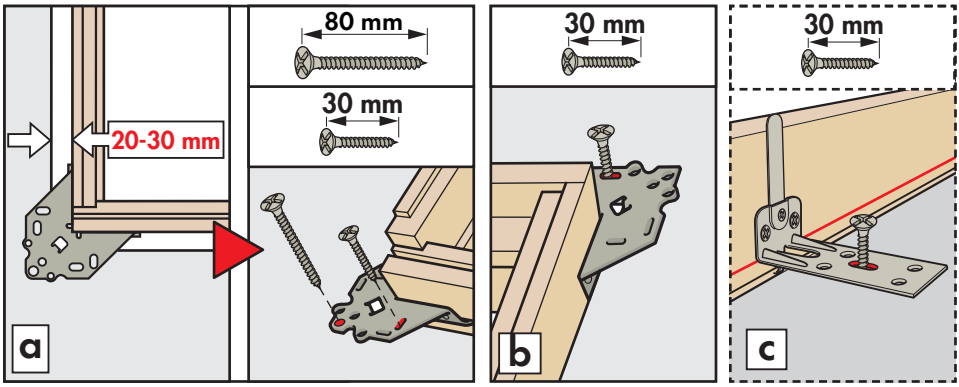

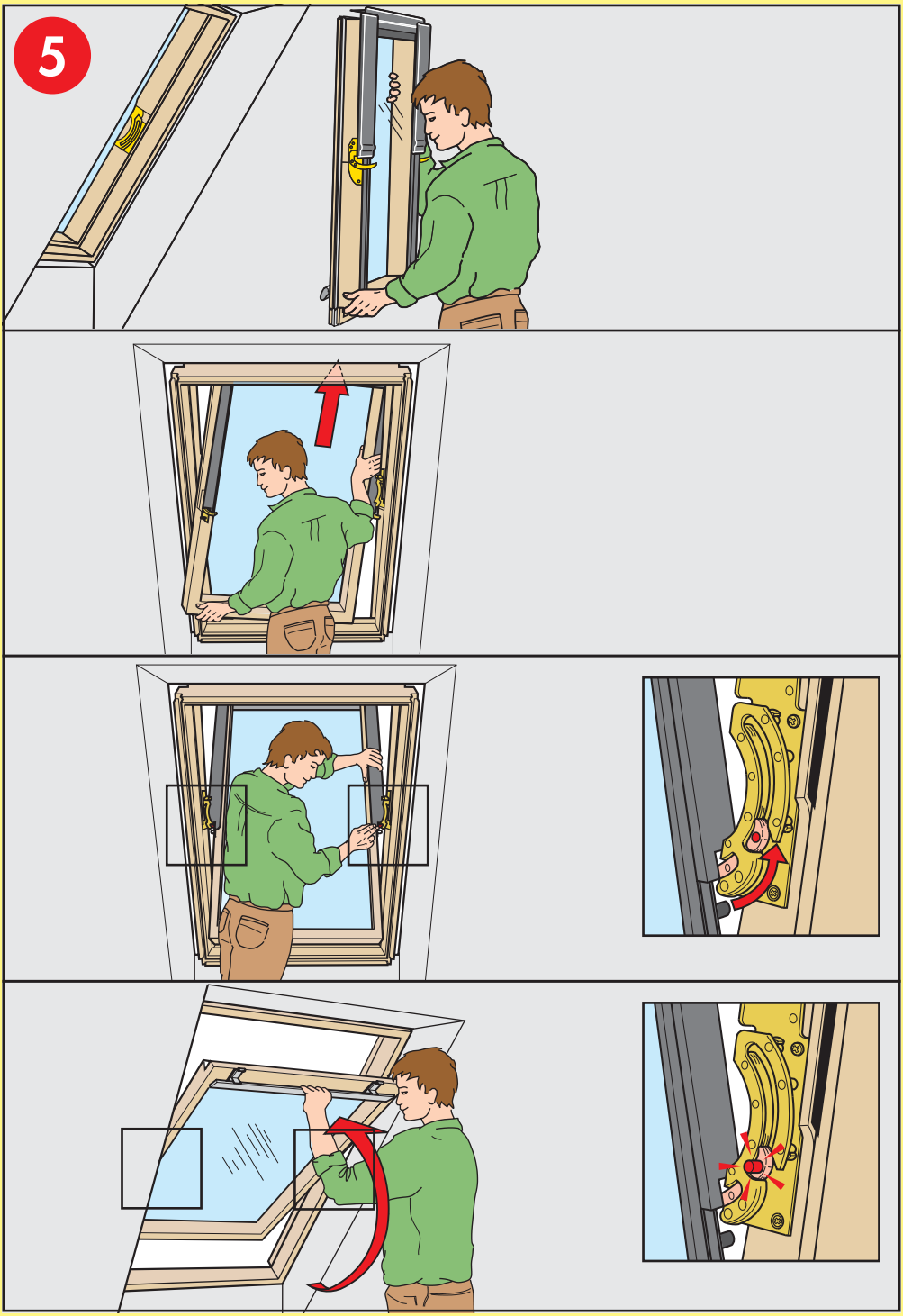
5

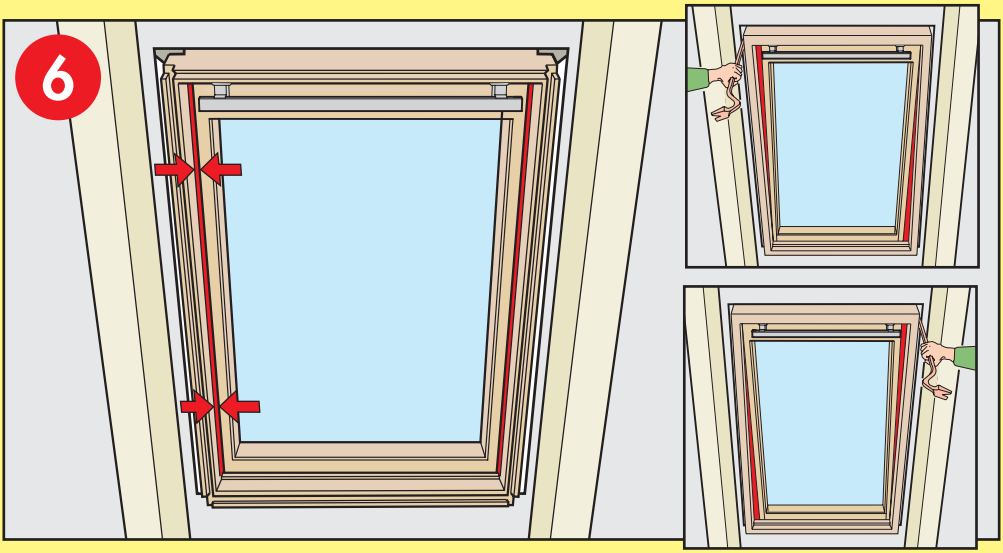
6

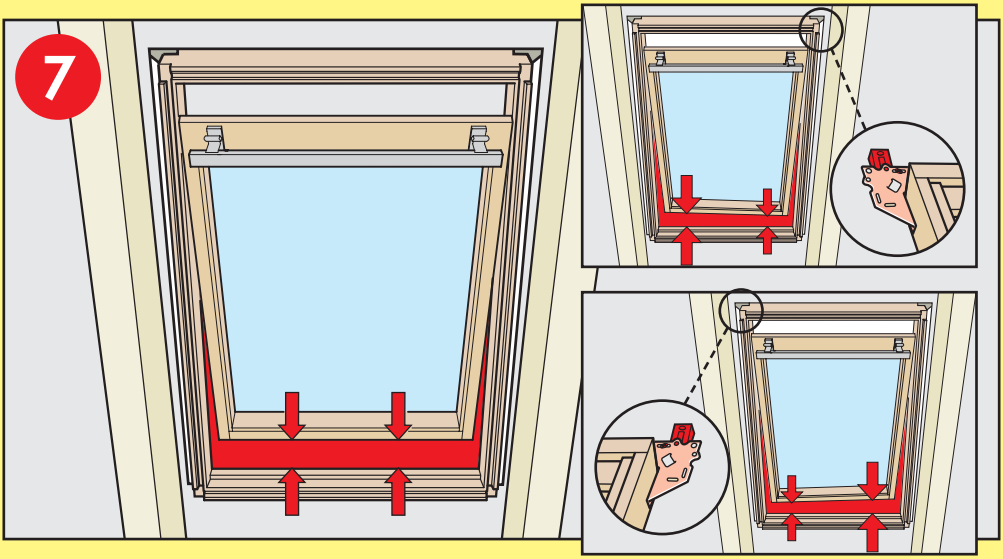
7

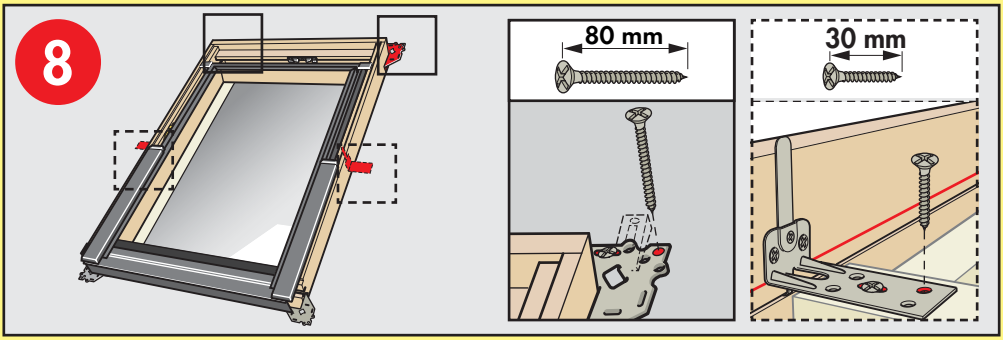
8
80 mm
30 mm

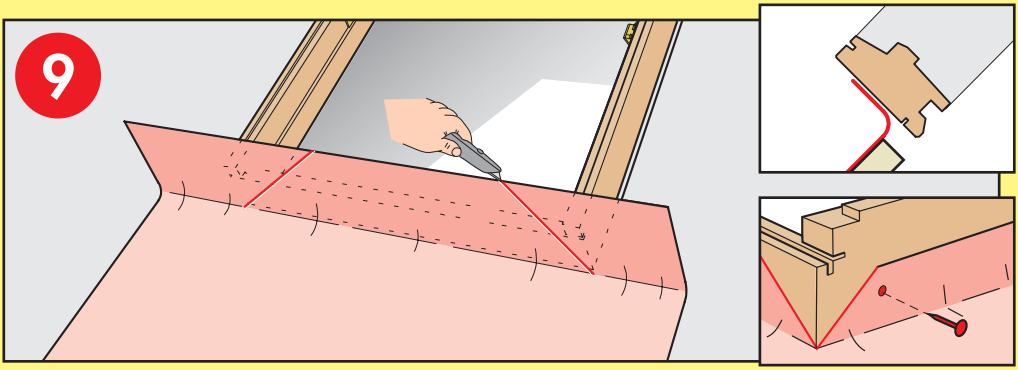
9

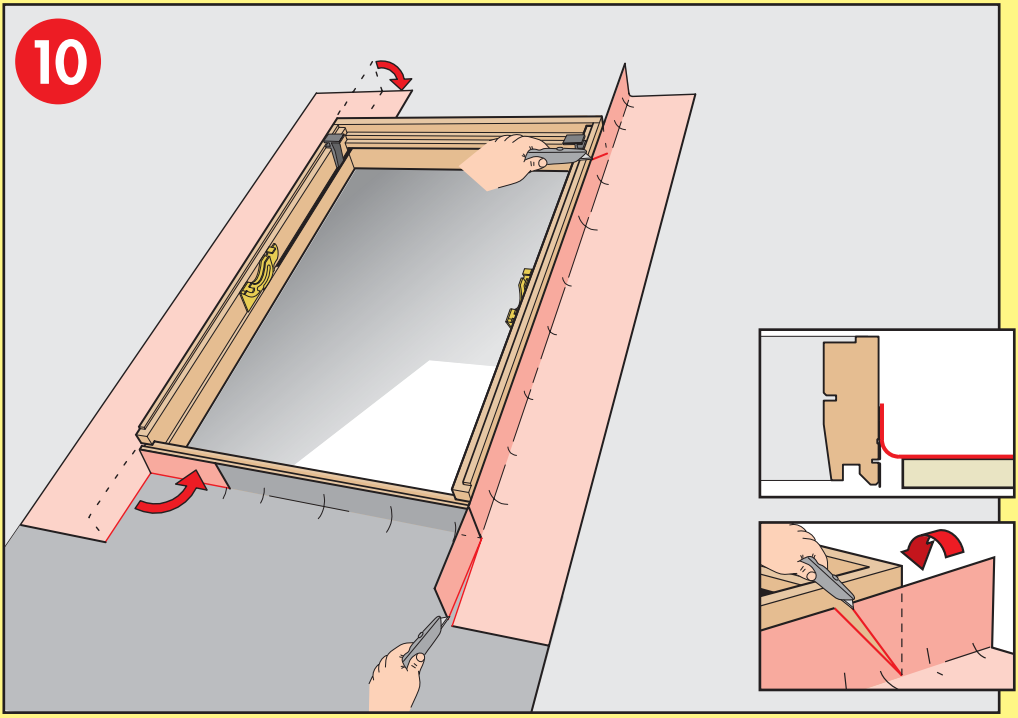
10

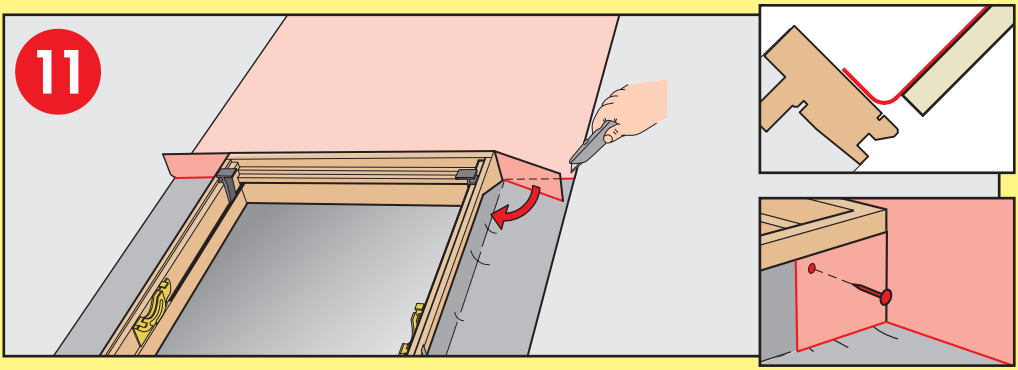
11

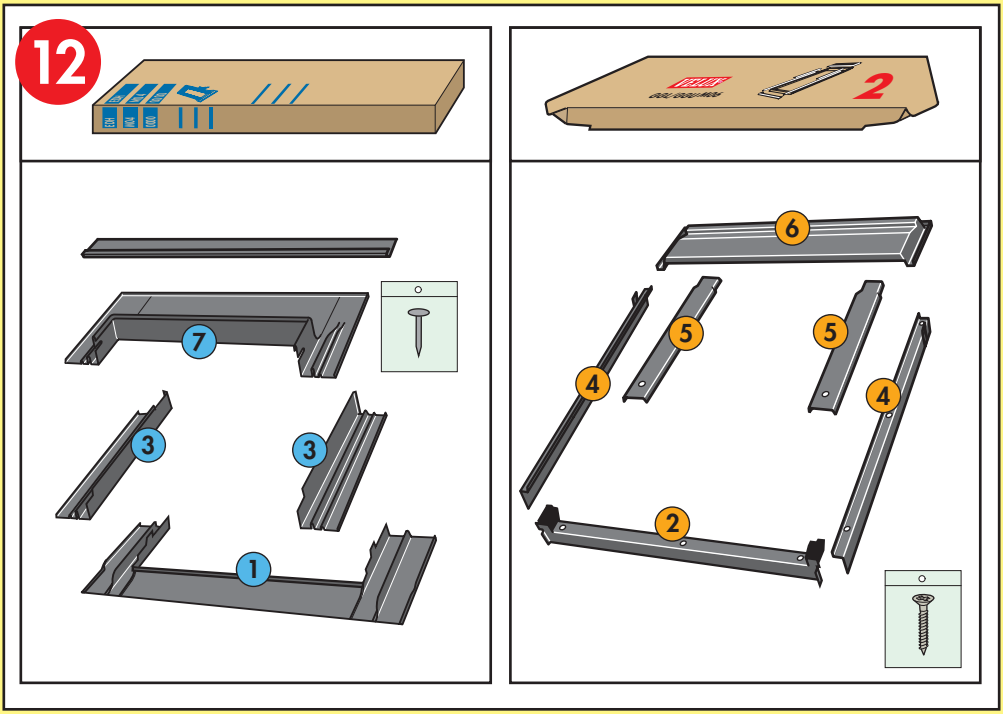
12
2
7
3
3
1
6
5
5
4
4
2

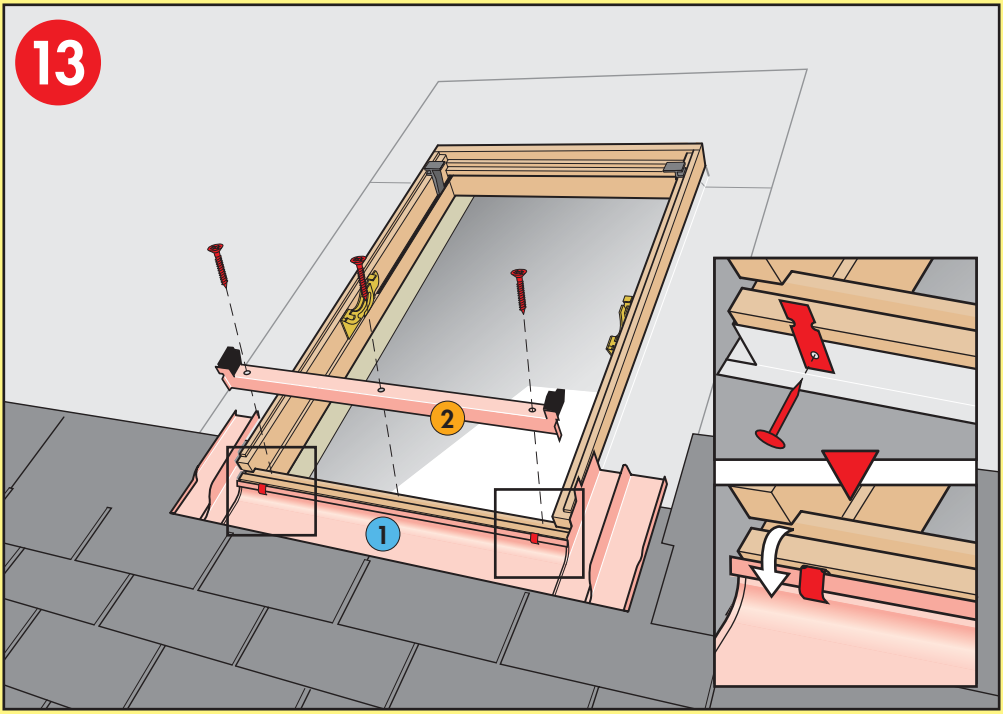
13
2
1

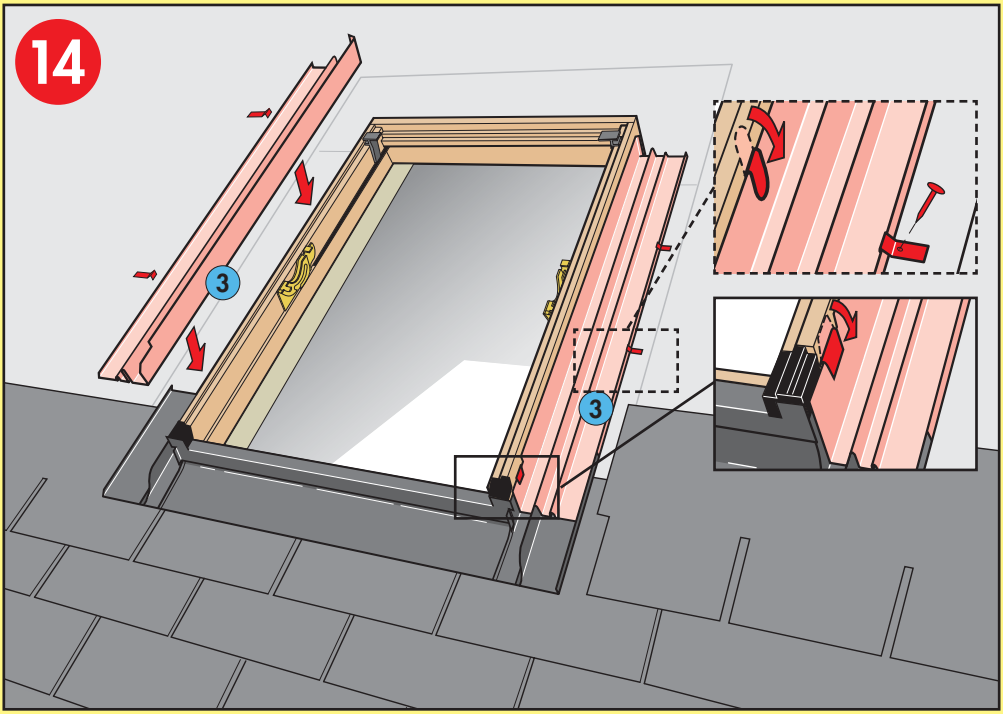
14
3
3

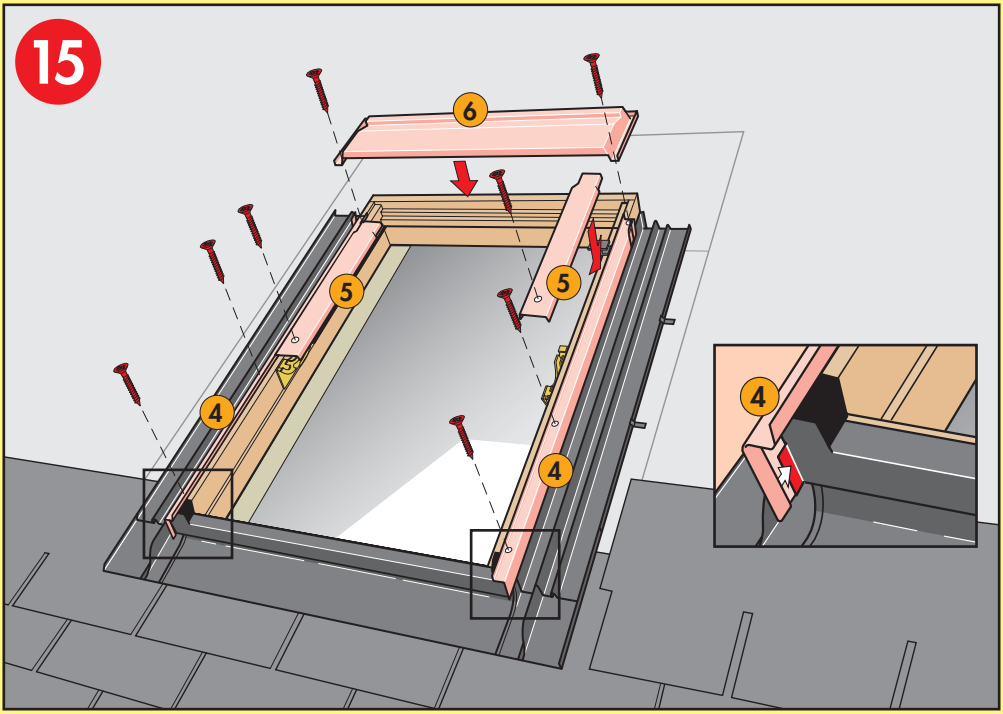
15
6
5
5
4
4
4

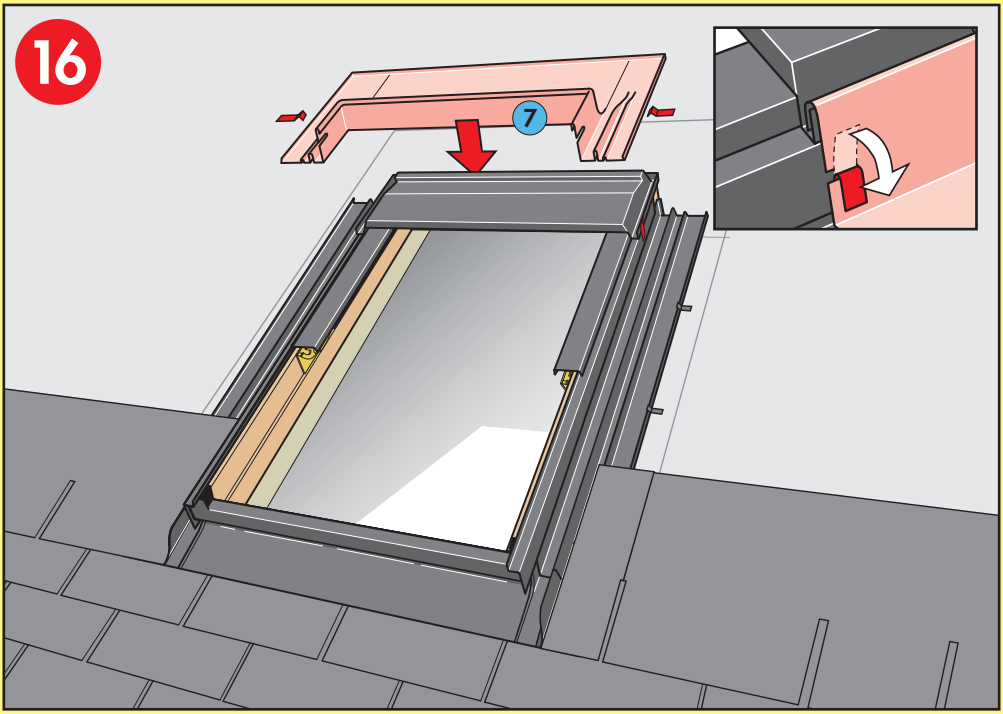
16
7

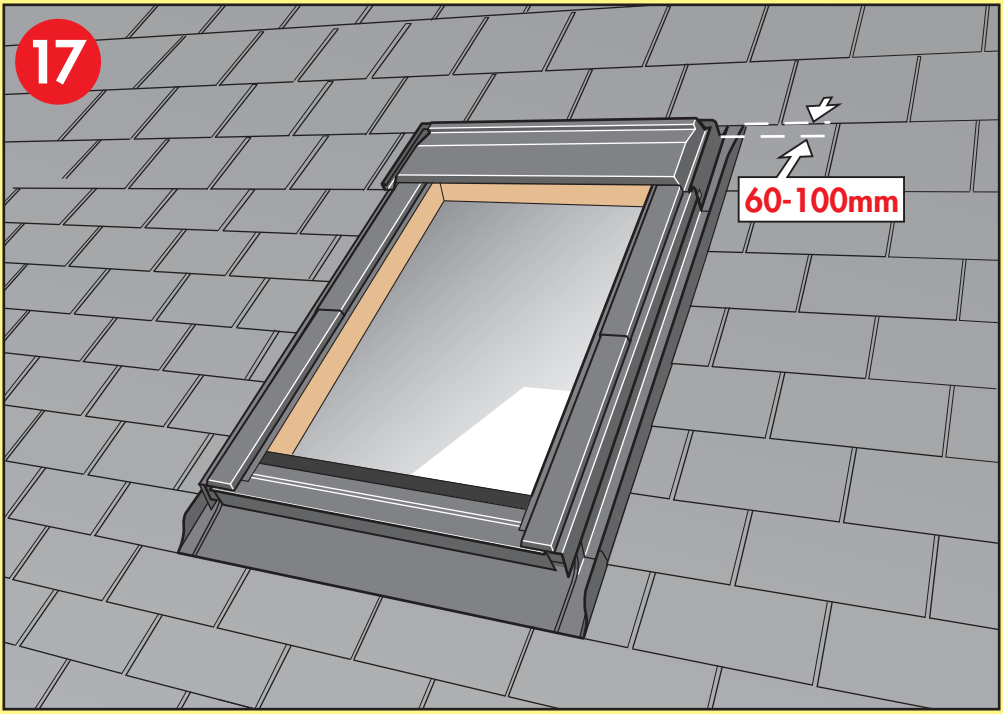
17
60-100mm

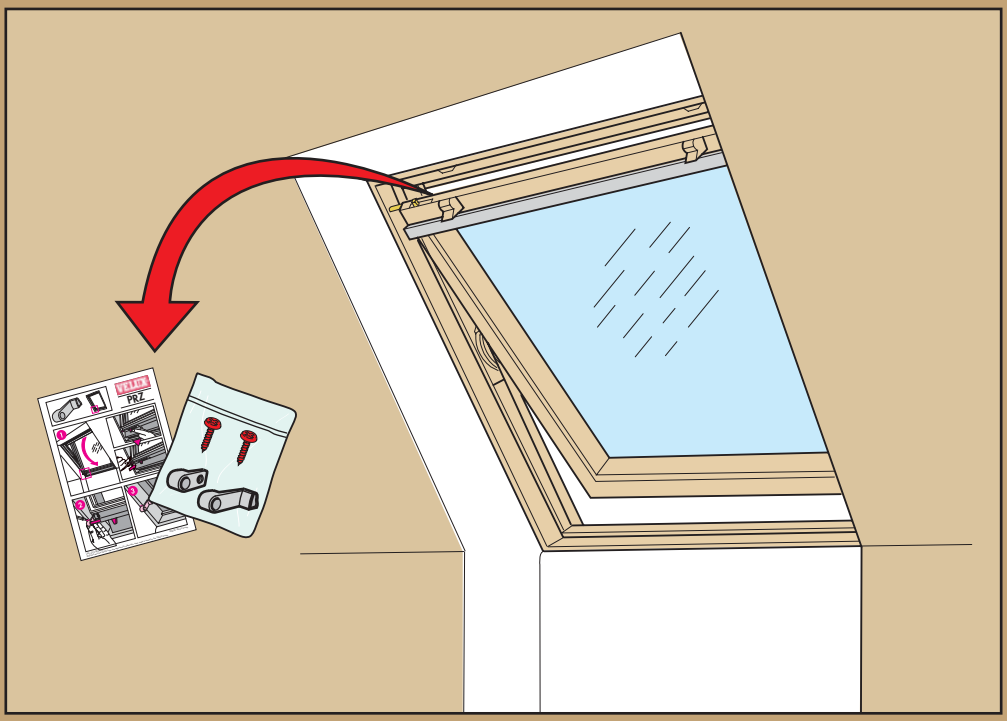
PRZ

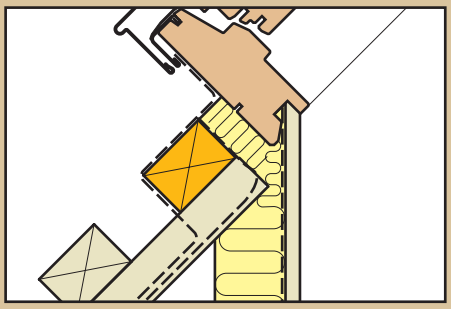

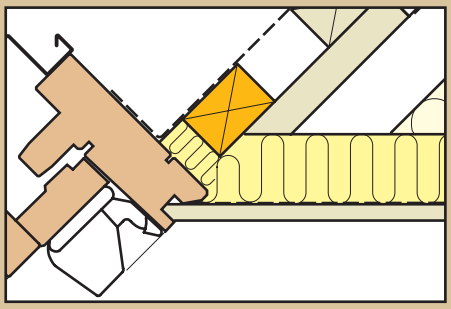

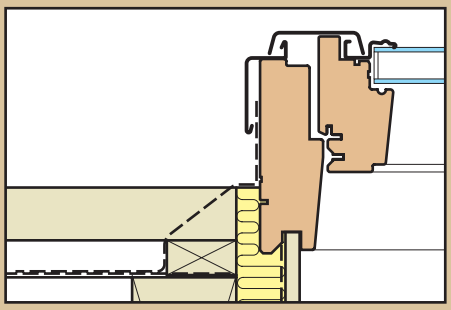

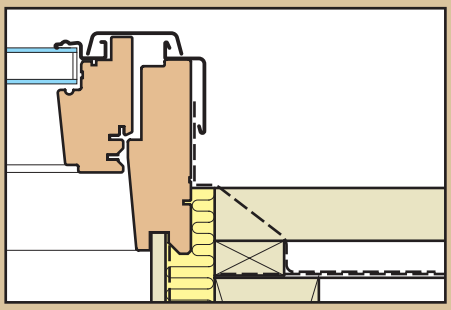

A: VELUX Österreich GmbH
☎ 02245/32 3 50

AUS: VELUX Australia Pty. Ltd.
☎ (02) 9550 3288

B: VELUX Belgium
☎ (010) 42.09.09

BG: VELUX Bulgaria EOOD
☎ 02/955 99 30

BiH: VELUX Bosna i Hercegovina d.o.o.
☎ 033/626 493, 626 494

BY: VELUX Roof Windows
☎ (017) 217 7385

CDN: VELUX Canada Inc.
☎ 1 800 88-VELUX (888-3589)

CH: VELUX Schweiz AG
☎ 0848 945 549

CHN: VELUX (CHINA) CO. LTD.
☎ 0316-607 27 27

CZ: VELUX Česká republika, s.r.o.
☎ 531 015 511

D: VELUX Deutschland GmbH
☎ 0180-333 33 99

DK: VELUX Danmark A/S
☎ 45 16 45 16

E: VELUX Spain, S.A.
☎ 91 509 71 00

EST: VELUX Eesti OÜ
☎ 601 1046

F: VELUX France
☎ 0821 02 15 15
0,119€ TTC/min

FIN: VELUX Suomi Oy
☎ 09-887 0520

GB: VELUX Company Ltd.
☎ 0870 380 9593

H: VELUX Magyarország Kft.
☎ (06/1) 436-0601

HR: VELUX Hrvatska d.o.o.
☎ 01/6221 212

I: VELUX Italia s.p.a.
☎ 045/6173666

IRL: VELUX Company Ltd.
☎ 01 816 1616

J: VELUX-Japan Ltd.
☎ 03(3478)81 41

LT: VELUX Lietuva, UAB
☎ (85) 270 91 01

LV: VELUX Latvia SIA
☎ 7 27 77 33

N: VELUX Norge AS
☎ 22 51 06 00

NL: VELUX Nederland B.V.
☎ 030 - 6 629 629

NZ: VELUX New Zealand Ltd.
☎ 09-6344 126

P: VELUX A/S - Sucursal em Portugal
☎ 21 880 00 60

PL: VELUX-POLSKA Sp. z o.o.
☎ (022) 33 77 000 / 33 77 070

RA: VELUX Argentina S.A.
☎ 0 114 711 5666

RCH: VELUX Chile Limitada
☎ 2-231 18 24

RO: VELUX România S.R.L.
☎ 0-8008-83589

RUS: VELUX Rossia ZAO
☎ (095) 737 75 20

S: VELUX Svenska AB
☎ 042/144450

SK: VELUX Slovensko, s.r.o.
☎ (02) 60 20 15 00

SLO: VELUX Slovenija d.o.o.
☎ 01 564 14 84

TR: VELUX Çatı Pencereleri Ticaret Limited Şirketi
☎ 0 216 302 54 10

UA: VELUX Ukraina TOV
☎ (044) 490 5703

USA: VELUX America Inc.
☎ 1-800-88-VELUX

YU: VELUX Jugoslavija d.o.o.
☎ 011 3670 468

www.VELUX.com

Installation instructions for roof window GZL + EDW/EDS. Order no. VAS 451244-0206

©2004, 2006 VELUX Group ®VELUX and the VELUX logo are registered trademarks used under licence by the VELUX Group